Ball valve, Metal

Construction

The GEMÜ 728 motorized 2/2-way stainless steel ball valve with top flange has a low maintenance electric actuator with a powerful DC motor. The reduction gear in the motor, consisting of a threaded spindle with a lever, provides the rotation through 90°. GEMÜ 728 has an optical position indicator and a manual override.

Features

- Suitable for inert, corrosive*, liquid and gaseous media and steam
- The GEMÜ 728 ball valves comply with the safety requirements of Annex I of the European Pressure Equipment Directive 97/23/EC (PED) for fluids of groups 1 and 2
- Fast on/off operation
- Electrical position indication via 2 potential-free, adjustable limit switches
- Opening and closing behaviour is independent of the operating pressure

Advantages

- Good flow capability
- Full-flow bore
- Adjustable end positions by means of microswitches
- Emergency power supply with 24V DC types by means of emergency power supply module type 1570
  (not with actuator version 2070)
- Low maintenance

*see information on working medium on page 2

Sectional drawing

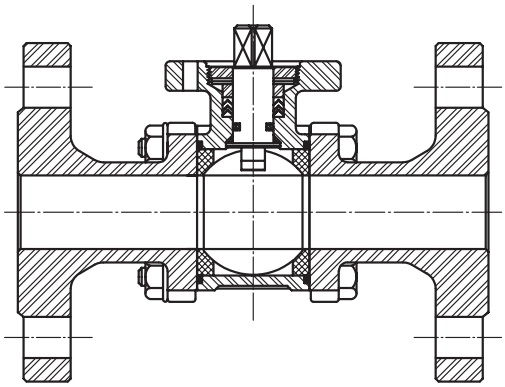

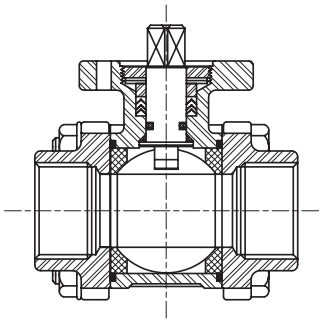

GEMÜ® 728

Technical data

Travel	
Nominal travel	90°
Max. travel	93°
Setting range limit switch Min.	-2 to 12°
Setting range limit switch Max.	76 to 91°

Protection class to EN 60529
IP 65

Manual override
with Allen key SW3

Permissible temperatures	
Ambient temperature	-10 to +60° C
Storage temperature	-20 to +60° C

Weight	
Supply voltage 12V / 24V	970 g
Supply voltage 100-250V	1200 g

Electrical connection

Actuator version	1015, 2015		2070, 4100, 4200			
Supply voltages	12V / 24V	100 - 250V	24V, 120V, 230V			
Functional module	A0,AE		A0,AE, AP	00,0E, 0P	E1	E2
Control input voltage	Motor voltage	20 - 250V AC/DC	24 - 250V AC/DC	Motor voltage	0 ... 10V	-
Control input current	-	typ. 1 mA	typ. 1 mA			0/4 ... 20 mA
Rating	continuously rated	rated 40%	continuously rated			
Connection	Cable connection PG 13.5	Hirschmann plug type N6RFFS11	Flange plug Binder 692/693			
Cable diameter	7.5 ... 12.5 mm	7 ... 9 mm	max. 8 mm			
Max. cross section of wire	1.5 mm²	1.5 mm²	0.75 mm²			
Recommended connection cable	5x1 mm² Ölflex®	1 connector (standard): 7x1 mm² Ölflex®	7x1 mm² Ölflex®			
Overload protection	Motor protective system by customer	Integrated stall and overload protection plus excess current release T 1A 5x20 mm	Motor protective system by customer			

Power consumption [W]

Voltage/ Frequency		B1 12V DC		C1 24V DC		B4 12V AC		C4 24V AC		G4 120V AC		L4 230V AC		O4 100-250V DC	
Functional module		A0,AE,AP E1,E2	00,0E 0P	A0,AE,AP E1,E2	00,0E 0P	A0,AE,AP E1,E2	00,0E 0P	A0,AE,AP E1,E2	00,0E 0P	A0,AE,AP E1,E2	00,0E 0P	A0,AE,AP E1,E2	00,0E 0P	A0,AE,AP E1,E2	00,0E 0P
Actuator version	1015	24	-	24	-	-	-	-	-	-	-	-	-	-	-
	2015	-	-	-	-	24	-	24	-	-	-	-	-	30	-
	2070	-	-	96	63	-	-	-	63	160	-	161	-	-	-
	4100	-	-	96	105	-	-	-	140	160	105	161	130	-	-
	4200	-	-	96	90	-	-	-	110	160	90	161	105	-	-

Actuator materials

Actuator version	1015	2015	2070	4100, 4200
Housing base	PP (30% glass reinforced)	PP (30% glass reinforced)	ABS	Aluminium
Housing cover	PPO (10% glass reinforced)	PP (30% glass reinforced)	ABS	Aluminium
Optical position indicator	PPR natural	PPR natural	PPR natural	PMMA

Technical data

Correlation Actuator version (torque) / Voltage-frequency								
Voltage/Frequency		B1 12V DC	C1 24V DC	B4 12V AC	C4 24V AC	G4 120V AC	L4 230V AC	O4 100-250V DC
Actuator version	1015 (15 Nm)	X	X	-	-	-	-	-
	2015 (15 Nm)	-	-	X	X	-	-	X
	2070 (70 Nm)	-	X	-	X	X	X	-
	4100 (100 Nm)	-	X	-	X	X	X	-
	4200 (200 Nm)	-	X	-	X	X	X	-

Correlation Actuator version (torque) / Functional module									
Functional module		A0	AE	AP	E2	E1	00	0E	0P
Actuator version	1015 (15 Nm)	X	X	-	-	-	-	-	-
	2015 (15 Nm)	X	X	-	-	-	-	-	-
	2070 (70 Nm)	X	X	X	X	X	X	X	X
	4100 (100 Nm)	X	X	X	X	X	X	X	X
	4200 (200 Nm)	X	X	X	X	X	X	X	X

Correlation Actuator / Ball valve type 728									
Ball valve			Adapter required	Actuator version					Height of mounting bracket [cm]
DN	Flange type	SW		1015	2015	2070	4100	4200	K
8	F04	9	no	F04 / S09	F04 / S09	-	-	-	-
10	F04	9	no	F04 / S09	F04 / S09	-	-	-	-
15	F04	9	no	F04 / S09	F04 / S09	-	-	-	-
20	F04	9	no	F04 / S09	F04 / S09	-	-	-	-
25	F05	11	yes	F05 / S09	F05 / S09		-	-	60
32	F05	11	yes	-	-	F07/S14	-	-	56
40	F07	14	no	-	-	F07/S14	-	-	-
50	F07	14	no	-	-	F07/S14	-	-	-
65	F10	17	yes	-	-	F07/S14	-	-	76
80	F10	17	no	-	-	-	F10/S17	-	-
100	F10	17	no	-	-	-	-	F10/S17	-

Order data

Body configuration	Code
Straight through (2/2-way)	D

Connection	Code
Threaded sockets DIN ISO 228	1
Flanges EN 1092 / PN 40 / form B (ex DIN 2501 / PN 40 / form C) length EN 558-1, series 1 ISO 5752, basic series 1 (ex DIN 3202-1, series F1)	11
Spigots	19
Spigots EN ISO 1127	60

Valve body material	Code
Body 1.4408 investment casting Ball 1.4401	37

Seal material	Code
Seat: PTFE (max. 150°C)	5

Voltage/Frequency	Code
12V DC	B1
12V AC 50/60Hz	B4
24V DC	C1
24V AC 50/60Hz	C4
120V AC 50/60Hz	G4
100-250V AC 50/60Hz	O4
230V AC 50/60Hz	L4

Functional module	Code
Standard OPEN/CLOSE control	A0
OPEN/CLOSE control with 2 additional potential-free limit switches	AE
OPEN/CLOSE control with potentiometer output	AP
Control module for external set value 0 - 10V DC	E1
Control module for external set value 0/4 - 20 mA	E2
OPEN/CLOSE control, not reversible	00
OPEN/CLOSE control, not reversible with 2 additional potential-free limit switches	0E
OPEN/CLOSE control, not reversible with potentiometer output	0P

Actuator version	Code
Torque 15 Nm, operating time 11 sec; planetary gear; supply voltage B1/C1	1015
Torque 15 Nm, operating time 11 sec; planetary gear; supply voltage B4/C4/O4	2015
Torque 70 Nm, operating time 15 sec; supply voltage C1/C4/G4/L4	2070
Torque 100 Nm, operating time 20 sec; supply voltage C1/C4/G4/L4	4100
Torque 200 Nm, operating time 16 sec; supply voltage C1/C4/G4/L4	4200

Order example	728	25	D	1	37	5	C1	A0	1015
Type	728								
Nominal size		25							
Body configuration (code)			D						
Connection (code)				1					
Valve body material (code)					37				
Seal material (code)						5			
Voltage/Frequency (code)							C1		
Functional module (code)								A0	
Actuator version (code)									1015

Operating pressure - Temperature for threaded sockets and butt weld spigots

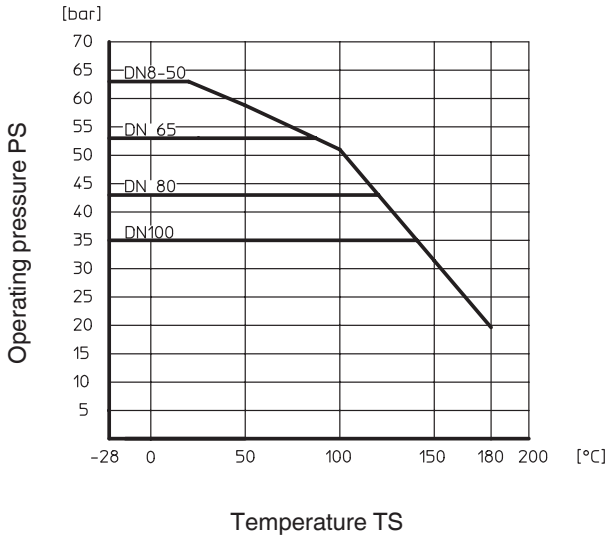

Operating pressure - Temperature for flanges

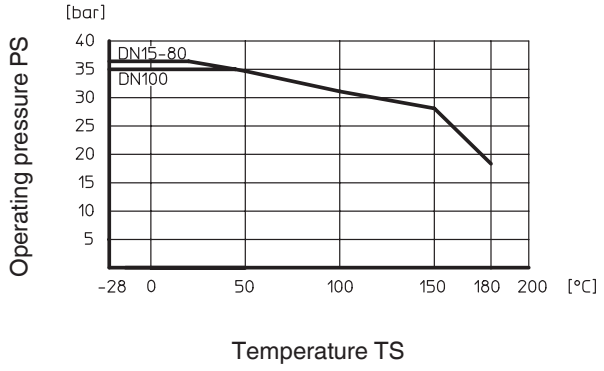

Data shown are typical non-binding values only!
The manufacturer assumes no liability whatsoever for any data selection not confirmed in writing.

Actuator dimensions [mm]

Actuator version 1015/2015

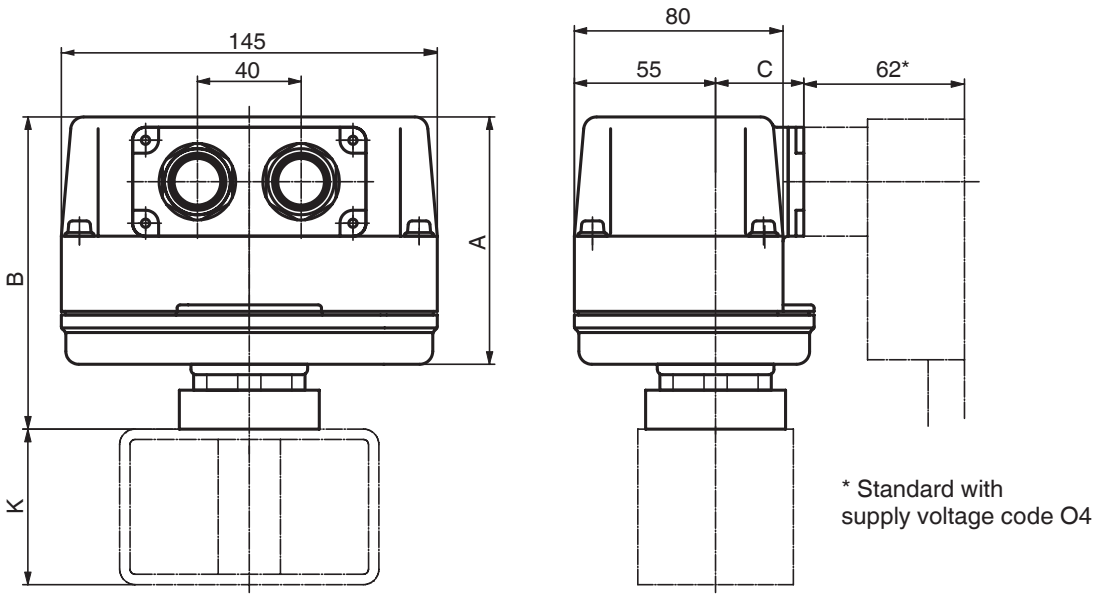

Actuator version	Voltages	A	B	C	ISO 5211	SW square drive socket
1015	12 V, 24 V	69	94	34	F04 / F05	9
2015	100 V - 250 V	95	120	38		

Actuator version 2070

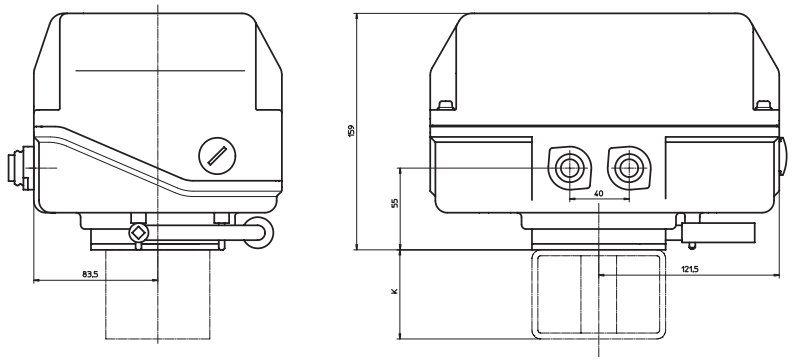

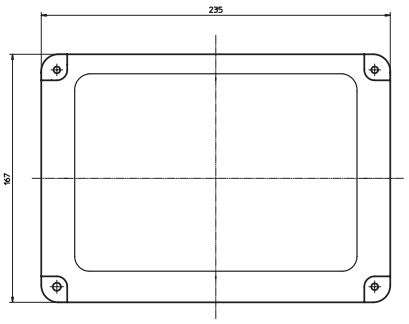

ISO 5211 (without mounting bracket)	SW square drive socket
F07	14

Actuator version 4100/4200

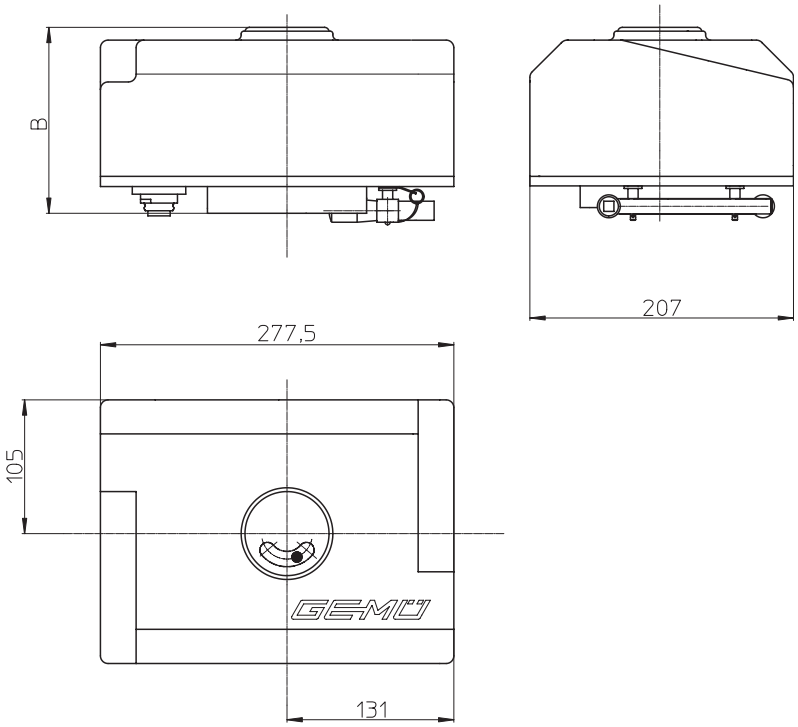

Functional module	B	ISO 5211	SW square drive socket
00, 0E, 0P	146	F07 + F10	17 / 22
A0, AE, AP, E2, E1	201		

Body dimensions [mm]

Threaded sockets, connection code 1												
DN	H	L	G	h ±0.5	T	F1			F2			SW
8	42.1	60	G 1/4	6.4	5	F03	36	ø6 x 4	F04	42	ø6 x 4	9
10	42.1	60	G 3/8	6.4	5	F03	36	ø6 x 4	F04	42	ø6 x 4	9
15	42.1	75	G 1/2	6.4	5	F03	36	ø6 x 4	F04	42	ø6 x 4	9
20	48.0	80	G 3/4	6.9	5	F03	36	ø6 x 4	F04	42	ø6 x 4	9
25	56.6	90	G 1	11.2	7	F04	42	ø6 x 4	F05	50	ø7 x 4	11
32	60.9	110	G 1 1/4	11.2	7	F04	42	ø6 x 4	F05	50	ø7 x 4	11
40	77.5	120	G 1 1/2	14.2	10	F05	50	ø7 x 4	F07	70	ø9 x 4	14
50	85.2	140	G 2	14.2	10	F05	50	ø7 x 4	F07	70	ø9 x 4	14
65	108.7	185	G 2 1/2	17.1	10	F07	70	ø9 x 4	F10	102	ø11 x 4	17
80	117.7	205	G 3	18.1	10	F07	70	ø9 x 4	F10	102	ø11 x 4	17
100	132.6	240	G 4	17.1	10	F07	70	ø9 x 4	F10	102	ø11 x 4	17

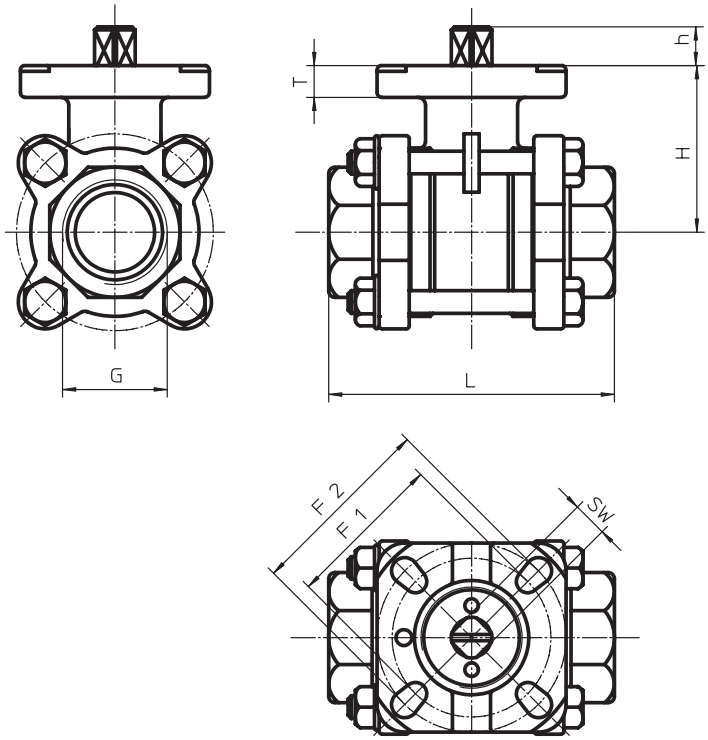

Body dimensions [mm]

Butt weld spigots, connection code 19													
DN	H	L	D	d	h ±0.5	T	F1			F2			SW
8	42.1	62.7	16.2	11.6	6.4	5	F03	36	ø6 x 4	F04	42	ø6 x 4	9
10	42.1	62.7	17.5	12.7	6.4	5	F03	36	ø6 x 4	F04	42	ø6 x 4	9
15	42.1	65.7	22.7	16.0	6.4	5	F03	36	ø6 x 4	F04	42	ø6 x 4	9
20	48.0	76.2	27.5	20.0	6.9	5	F03	36	ø6 x 4	F04	42	ø6 x 4	9
25	56.6	86.2	34.0	25.0	11.2	7	F04	42	ø6 x 4	F05	50	ø7 x 4	11
32	60.9	102.8	42.7	32.0	11.2	7	F04	42	ø6 x 4	F05	50	ø7 x 4	11
40	77.5	119.4	48.6	38.0	14.2	10	F05	50	ø7 x 4	F07	70	ø9 x 4	14
50	85.2	131.4	60.5	50.0	14.2	10	F05	50	ø7 x 4	F07	70	ø9 x 4	14
65	108.7	164.0	76.3	65.0	17.1	10	F07	70	ø9 x 4	F10	102	ø11 x 4	17
80	117.7	182.7	90.0	80.0	18.1	10	F07	70	ø9 x 4	F10	102	ø11 x 4	17
100	132.6	236.2	116.0	100.0	17.1	10	F07	70	ø9 x 4	F10	102	ø11 x 4	17

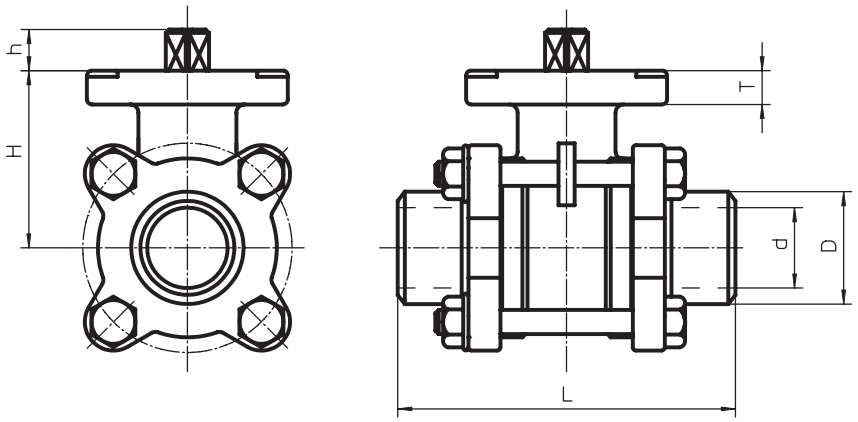

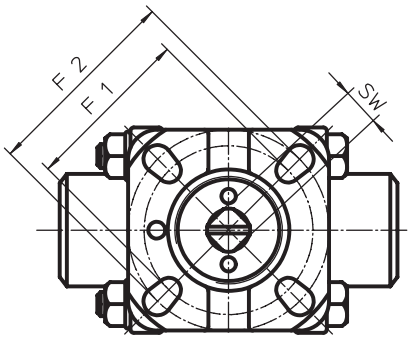

Body dimensions [mm]

Flanges, connection code 11																			
DN	H	L	øD	øe	ød	Z	øk	øg	f	b	h ±0.5	T	F1			F2			SW
15	42.1	130	95	15	14	4	65	45	2	16	6.4	5	F03	36	ø6 x 4	F04	42	ø6 x 4	9
20	48.0	150	105	20	14	4	75	58	2	18	6.9	5	F03	36	ø6 x 4	F04	42	ø6 x 4	9
25	56.6	160	115	25	14	4	85	68	2	18	11.2	7	F04	42	ø6 x 4	F05	50	ø7 x 4	11
32	60.9	180	140	32	18	4	100	78	2	18	11.2	7	F04	42	ø6 x 4	F05	50	ø7 x 4	11
40	77.5	200	150	38	18	4	110	88	3	18	14.2	10	F05	50	ø7 x 4	F07	70	ø9 x 4	14
50	85.2	230	165	50	18	4	125	102	3	20	14.2	10	F05	50	ø7 x 4	F07	70	ø9 x 4	14
65	108.7	290	185	65	18	8	145	122	3	22	17.1	10	F07	70	ø9 x 4	F10	102	ø11 x 4	17
80	117.7	310	200	80	18	8	160	138	3	24	18.1	10	F07	70	ø9 x 4	F10	102	ø11 x 4	17
100	132.6	350	235	100	22	8	190	162	3	24	17.1	10	F07	70	ø9 x 4	F10	102	ø11 x 4	17

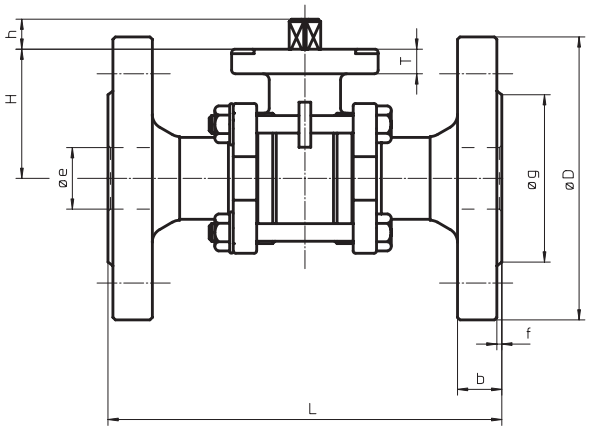

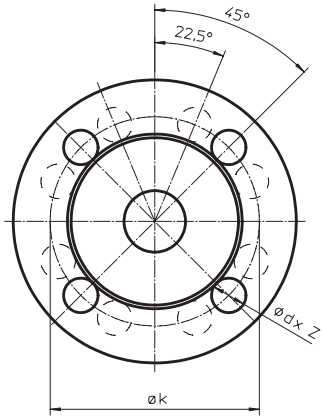

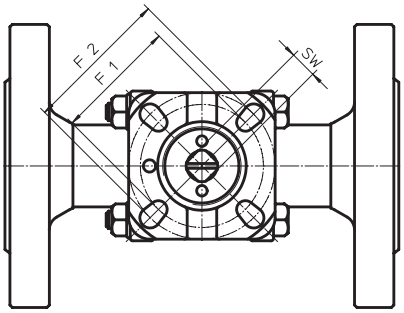

Body dimensions [mm]

ISO butt weld spigots, connection code 60														
DN	H	L	LS	D	S	h ±0.5	T	F1			F2			SW
8	42.1	120.2	28.2	13.5	1.6	6.4	5	F03	36	ø6 x 4	F04	42	ø6 x 4	9
10	42.1	120.2	28.2	17.2	1.6	6.4	5	F03	36	ø6 x 4	F04	42	ø6 x 4	9
15	42.1	140.2	38.2	21.3	1.6	6.4	5	F03	36	ø6 x 4	F04	42	ø6 x 4	9
20	48.0	140.0	36.3	26.9	1.6	6.9	5	F03	36	ø6 x 4	F04	42	ø6 x 4	9
25	56.6	152.2	38.6	33.7	2.0	11.2	7	F04	42	ø6 x 4	F05	50	ø7 x 4	11
32	60.9	165.1	38.3	42.4	2.0	11.2	7	F04	42	ø6 x 4	F05	50	ø7 x 4	11
40	77.5	190.4	44.3	48.3	2.0	14.2	10	F05	50	ø7 x 4	F07	70	ø9 x 4	14
50	85.2	203.0	45.3	60.3	2.0	14.2	10	F05	50	ø7 x 4	F07	70	ø9 x 4	14
65	108.7	254.0	52.0	76.1	2.0	17.1	10	F07	70	ø9 x 4	F10	102	ø11 x 4	17
80	117.7	280.2	55.1	88.9	2.3	18.1	10	F07	70	ø9 x 4	F10	102	ø11 x 4	17
100	132.6	317.0	58.5	114.3	2.3	17.1	10	F07	70	ø9 x 4	F10	102	ø11 x 4	17

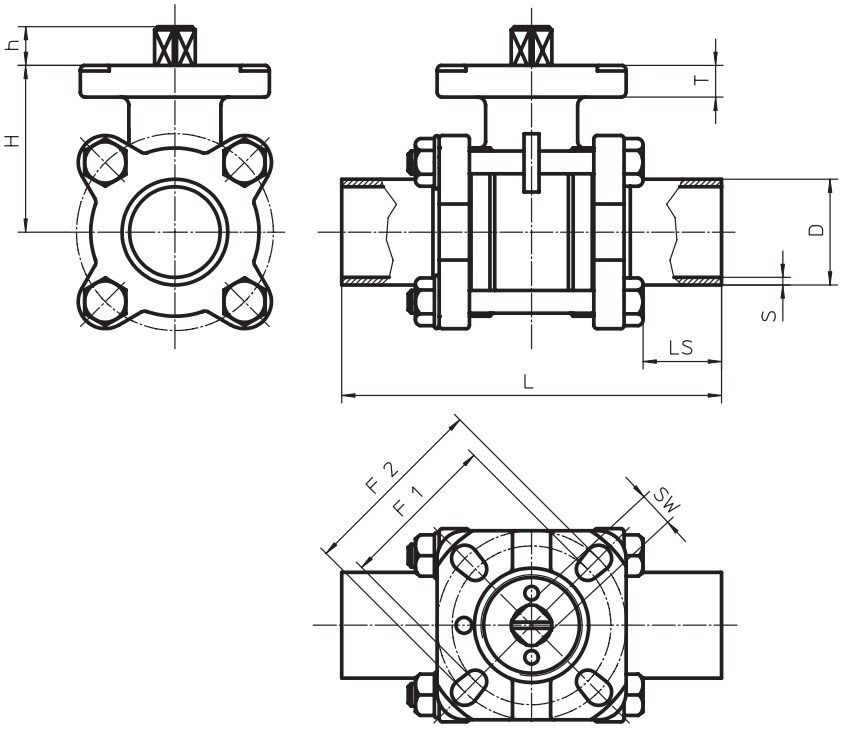

Connection / wiring diagrams

Actuator version 1006, 1015 - 12V / 24V DC (A0 - OPEN/CLOSE control)

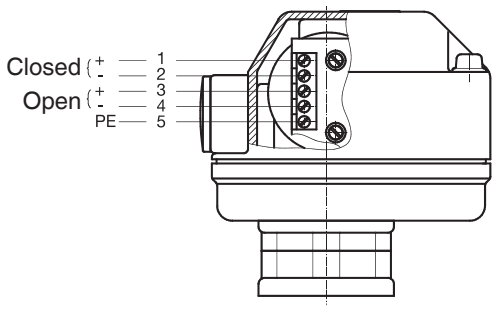

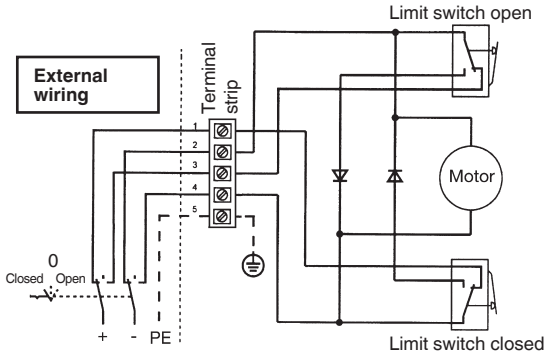

Terminals must not be bridged!
If parallel connection of several actuators is required, the version with K-no. 6410 must be used.

Actuator version 1006, 1015 - 12V / 24V AC (A0 - OPEN-CLOSE control)

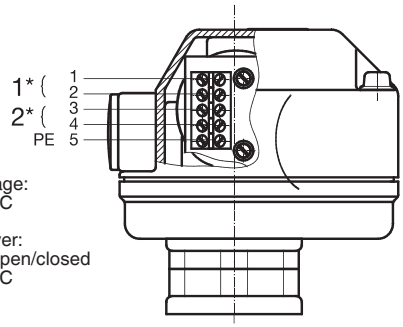

1*) Motor voltage:
12V/24V AC

2*) Change-over:
Direction open/closed
12V/24V AC

Ad 2*) Change-over voltage: On = direction of travel "OPEN"
Off = direction of travel "CLOSED"

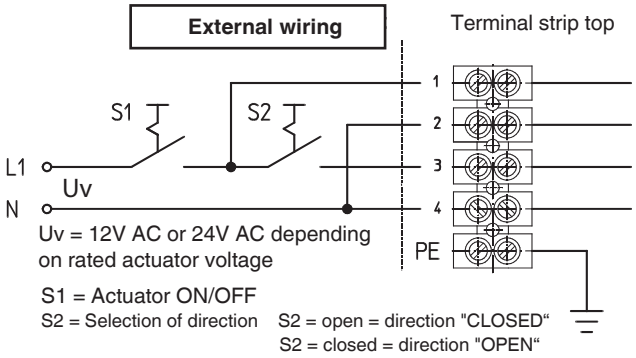

Actuator version 1006, 1015 - 12V / 24V DC (AE - 2 potential-free limit switches)

X1, X2 = Connector type Hirschmann N6RAM2931592-001

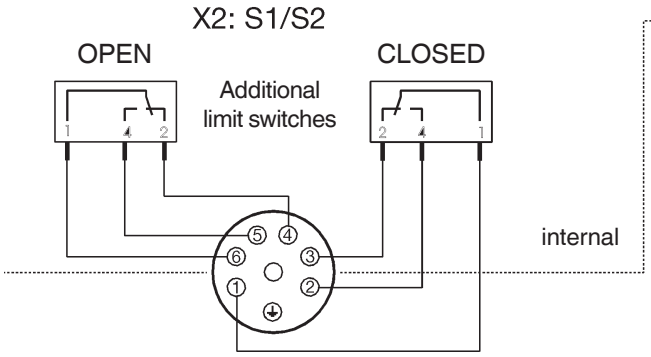

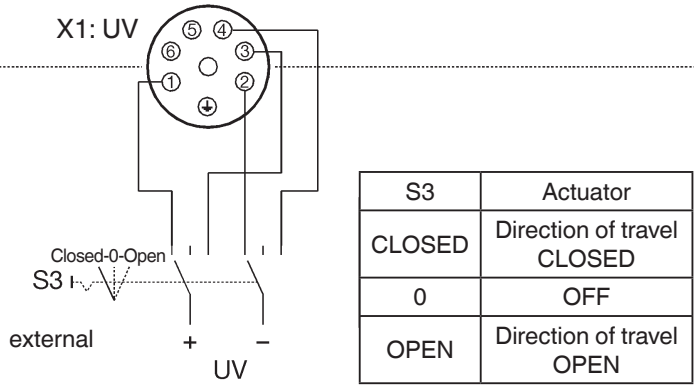

S3	Actuator
CLOSED	Direction of travel CLOSED
0	OFF
OPEN	Direction of travel OPEN

Connection / wiring diagrams

Actuator version 1006, 2015 - 12V / 24V AC (AE -2 potential-free limit switches)

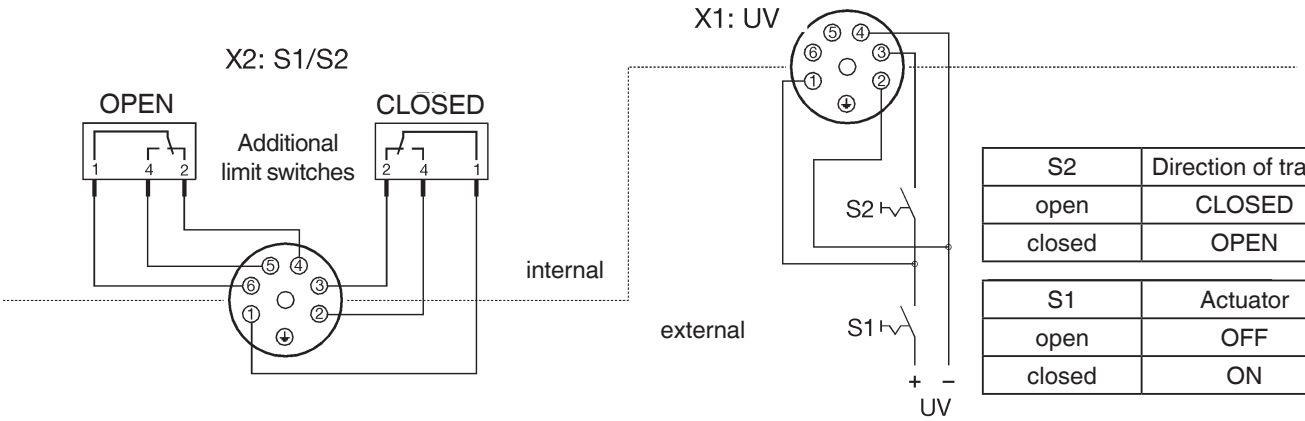

S2	Direction of travel
open	CLOSED
closed	OPEN

S1	Actuator
open	OFF
closed	ON

Actuator version 2006, 2015 - 100-250V AC (A0 - Open-Close control)

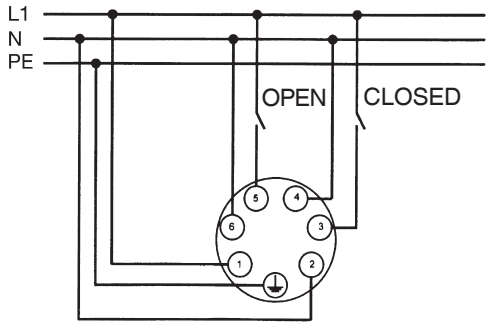

Pin	Signal name
1	L1 / L+, Supply voltage
2	N1 / L-, Supply voltage
3	L1 / L+, Direction of travel CLOSED
4	N / L-, Direction of travel CLOSED
5	L1 / L+, Direction of travel OPEN
6	N / L-, Direction of travel OPEN
⏚	PE, Protective earth conductor

When the OPEN and CLOSED switches are operated simultaneously the actuator "CLOSES"
Pins 2, 4 and 6 can be joined in the connector plug.
→ Advantage: 5-wire cable can be used.
No galvanic isolation of inputs!

Actuator version 2006, 2015 - 100-250V AC (AE - 2 potential-free limit switches)

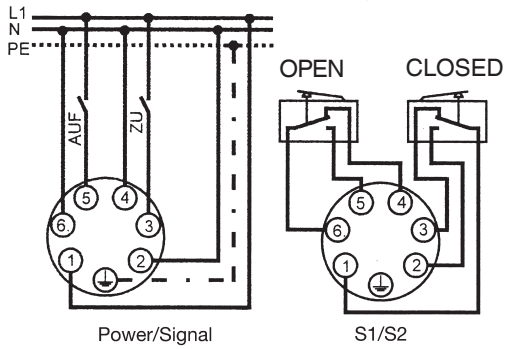

Pin	Signal name
1	L1 / L+, Supply voltage
2	N1 / L-, Supply voltage
3	L1 / L+, Direction of travel CLOSED
4	N / L-, Direction of travel CLOSED
5	L1 / L+, Direction of travel OPEN
6	N / L-, Direction of travel OPEN
⏚	PE, Protective earth conductor

N / L-, signals in the unit are separated
Potential assignment by customer.

Pin	Signal name
1	S 1:1, Change-over contact limit switch CLOSED
2	S 1:4, Make contact limit switch CLOSED
3	S 1:2, Break contact limit switch CLOSED
4	S 2:2, Break contact limit switch OPEN
5	S 2:4, Make contact limit switch OPEN
6	S 2:1, Change-over contact limit switch OPEN
	PE, Protective earth conductor

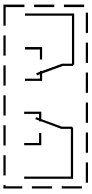

Connection / wiring diagrams

Actuator version 2070 - 100-250V AC (A0 - OPEN-CLOSE control)

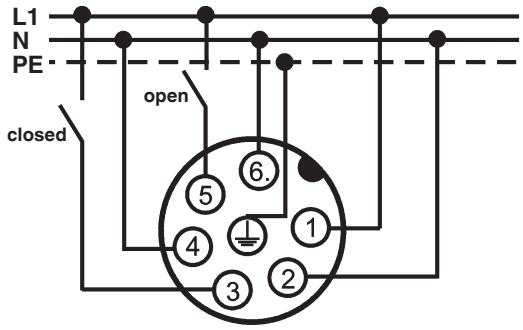

X 1: Power connector

Pin	Signal name
1	L1 / L+, Supply voltage
2	N1 / L-, Supply voltage
3	L1 / L+, Direction of travel CLOSED
4	N / L-, Direction of travel CLOSED
5	L1 / L+, Direction of travel OPEN
6	N / L-, Direction of travel OPEN
⏚	PE, Protective earth conductor

When the OPEN and CLOSED switches are operated simultaneously the actuator "CLOSES"
Pins 2, 4 and 6 can be joined in the connector plug.
→ Advantage: 5-wire cable can be used.
No galvanic isolation of inputs!

Actuator version 2070 - 100-250V AC (AE - 2 potential-free limit switches)

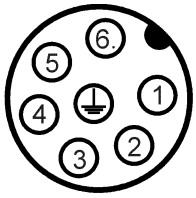

N / L-, signals in the unit are separated.
Potential assignment by customer.

X 1: Power connector

Pin	Signal name
1	L1 / L+, Supply voltage
2	N1 / L-, Supply voltage
3	L1 / L+, Direction of travel CLOSED
4	N / L-, Direction of travel CLOSED
5	L1 / L+, Direction of travel OPEN
6	N / L-, Direction of travel OPEN
⏚	PE, Protective earth conductor

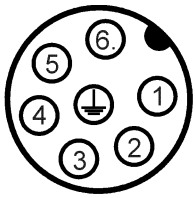

X 2: Connector S1/S2
(potential-free additional limit switches)

Pin	Signal name
1	S 1:1, Change-over contact limit switch CLOSED
2	S 1:4, Make contact limit switch CLOSED
3	S 1:2, Break contact limit switch CLOSED
4	S 2:2, Break contact limit switch OPEN
5	S 2:4, Make contact limit switch OPEN
6	S 2:1, Change-over contact limit switch OPEN
⏚	PE, Protective earth conductor

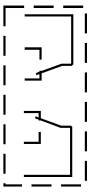

When the OPEN and CLOSED switches are operated simultaneously the actuator "CLOSES"

Actuator version 2070 (AP - potentiometer output)

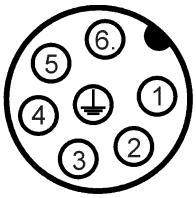

N / L-, signals in the unit are separated.
Potential assignment by customer.

X 1: Power connector

Pin	Signal name
1	L1 / L+, Supply voltage
2	N1 / L-, Supply voltage
3	L1 / L+, Direction of travel CLOSED
4	N / L-, Direction of travel CLOSED
5	L1 / L+, Direction of travel OPEN
6	N / L-, Direction of travel OPEN
⏚	PE, Protective earth conductor

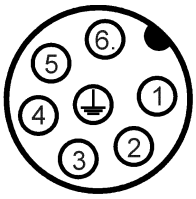

X 2: Connector S1/S2
(Rotary potentiometer for actual value feedback)

Pin	Signal name
1	n.c.
2	n.c.
3	n.c.
4	Us-, Actual value potentiometer signal voltage minus
5	Us ⎓, Actual value potentiometer signal output
6	Us+, Actual value potentiometer signal voltage plus
⏚	PE, Protective earth conductor

When the OPEN and CLOSED switches are operated simultaneously the actuator "CLOSES"

Connection / wiring diagrams

Actuator version 2070 (E2 - control module)

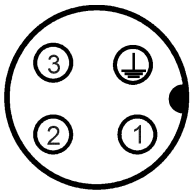

X 1: Power connector

Pin	Signal name
1	L1 / L+, Supply voltage
2	N1 / L-, Supply voltage
3	n.c.
⏚	PE, Protective earth conductor

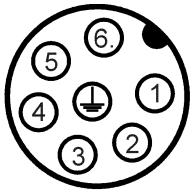

X 2: Signal connector

Pin	Signal name
1	n.a. (do not use)
2	n.a. (do not use)
3	I-, external set value 0/4-20mA
4	I+, external set value 0/4-20mA
5	n.c.
6	n.c.
⏚	PE, Protective earth conductor

Actuator version 2070 (E1 - control module)

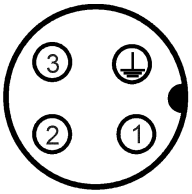

X 1: Power connector

Pin	Signal name
1	L1 / L+, Supply voltage
2	N1 / L-, Supply voltage
3	n.c.
⏚	PE, Protective earth conductor

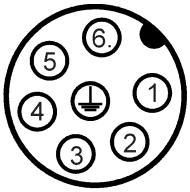

X 2: Signal connector

Pin	Signal name
1	n.a. (do not use)
2	n.a. (do not use)
3	U-, external set value 0-10V
4	U+, external set value 0-10V
5	n.c.
6	n.c.
⏚	PE, Protective earth conductor

Actuator version 2070 (00 - Open-Close control (relay version))

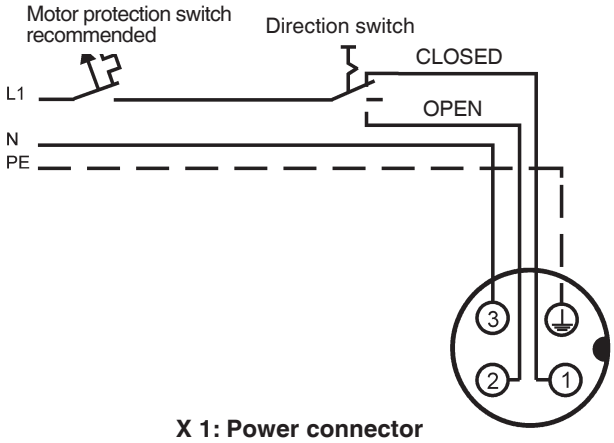

X 1: Power connector

Pin	Signal name
1	L1, Direction of travel CLOSED
2	L1, Direction of travel OPEN
3	N, Neutral conductor
⏚	PE, Protective earth conductor

Connection / wiring diagrams

Actuator version 2070 (0E - 2 potential-free limit switches (relay version))

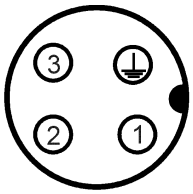

X 1: Power connector

Pin	Signal name
1	L1, Direction of travel CLOSED
2	L1, Direction of travel OPEN
3	N, Neutral conductor
⏚	PE, Protective earth conductor

X 2: Connector S1/S2
(potential-free additional limit switches)

Pin	Signal name
1	S 1:1, Change-over contact limit switch CLOSED
2	S 1:4, Make contact limit switch CLOSED
3	S 1:2, Break contact limit switch CLOSED
4	S 2:2, Break contact limit switch OPEN
5	S 2:4, Make contact limit switch OPEN
6	S 2:1, Change-over contact limit switch OPEN
⏚	PE, Protective earth conductor

Actuator version 2070 (0P - potentiometer output (relay version))

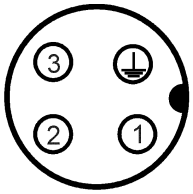

X 1: Power connector

Pin	Signal name
1	L1, Direction of travel CLOSED
2	L1, Direction of travel OPEN
3	N, Neutral conductor
⏚	PE, Protective earth conductor

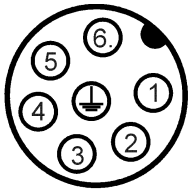

X 2: Connector S1/S2
(Rotary potentiometer for actual value feedback)

Pin	Signal name
1	n.c.
2	n.c.
3	n.c.
4	Us-, Actual value potentiometer signal voltage minus
5	Us ⎍, Actual value potentiometer signal output
6	Us+, Actual value potentiometer signal voltage plus
⏚	PE, Protective earth conductor

Other metal ball valves

GEMÜ 707
Metal ball valve, 2-piece body,
manually operated

GEMÜ 712
Metal ball valve, 3-piece body,
manually operated

GEMÜ 711
Metal ball valve, 3-piece body,
with top flange,
manually operated

GEMÜ 751
Metal ball valve, 3-piece body,
with top flange,
pneumatically operated

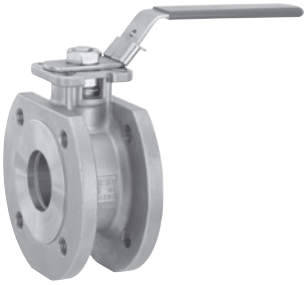

GEMÜ 762
Metal ball valve, 1-piece body,
with top flange,
manually operated

GEMÜ 761
Metal ball valve, 1-piece body,
with top flange,
pneumatically operated

GEMÜ 738
Metal ball valve, 1-piece body,
with top flange,
motorized

For further ball valves and other products, please see our Product Range catalogue and Price List.
Contact GEMÜ.

TÜV CERT
DIN EN ISO 9001
Zertifikat: 09 100 4136

GEMÜ® VALVES, MEASUREMENT AND CONTROL SYSTEMS

GEMÜ Gebr. Müller · Apparatebau GmbH & Co. KG · Fritz-Müller-Str. 6-8 · D-74653 Ingelfingen-Criesbach · Tel. +49 (0) 7940/123-0 · Telefax +49 (0) 7940/123-224
info@gemue.de · www.gemue.de

Technical data sheet
Should there be any doubts or misunderstandings, the German version of this data sheet is the authoritative document!
Subject to alteration · 06/2009 · 88283083