Butterfly Valve, Metal

Construction

GEMÜ type D480 is a wafer pattern butterfly valve with various versions. It is available in nominal sizes DN 25 – 1400, various body versions (Wafer, Lug and U section) and in a large number of seal and body materials. It can be supplied with various operators: hand lever or gearbox, pneumatic actuator or motorized on/off or control actuator.

Features

- Suitable for gaseous and liquid media in industrial applications as well as water treatment
- Installation length acc. to ISO 5752/20, EN 558-1/20
- Top flange acc. to EN ISO 5211
- Max. operating pressure 10/16/25 bar
- Connection standards PN 10, PN 16, ANSI cl. 150
- Leak test acc. to EN 12266 / ISO 5208
- The butterfly valve complies with the safety requirements of Annex I of the European Pressure Equipment Directive 97/23/EC for fluids of group 1 and 2

DVGW CERT

Sectional drawing

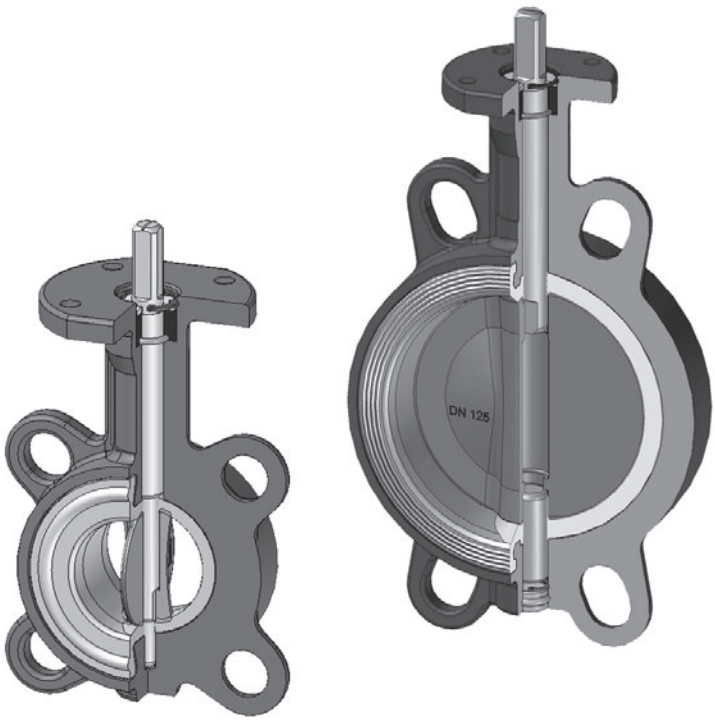

GEMÜ D487

GEMÜ D481

GEMÜ D488

D480, D481, D487, D488

Technical data

Working medium

Gaseous and liquid media which have no negative impact on the physical and chemical properties of the disc and seal material.

Ambient conditions

Permissible ambient temperature	-20 to 70°C

Perm. temperature of working medium

-60 to 200°C (dependent on seat (liner) material)

Other temperatures on request

No water hammer permissible

Body material

Cast iron	EN GJL-250
SG iron	EN GJS-400-15 (GGG40)
Carbon steel	ASTM A216/A216M WCB
Cast stainless steel	ASTM A351/A351M CF8-CF8M
Cast bronze	DIN 1705 (Rg 10)
Coated carbon steel	EN10025 S 275 JR
Coated stainless steel	AISI 304/316
Cast aluminium	EN-AC-47100 (≥DN125)
Cast aluminium	EN-AC-46100 (≤DN125)

Disc material

Cast stainless steel	ASTM A 351/A351M CF-8
Cast aluminium	EN-AC-44100
SG iron	EN-GJS400-15
Cast bronze	DIN 1705 (Rg 10)
Cast stainless steel	ASTM A351/A351M CF8M
Carbon steel	ASTM A216/A216M WCB
SG iron and EPDM	EN GJS-400-15 + EPDM
Duplex	ASTM A 351/A351M CD4MCu NORIDUR
Cast stainless steel	ASTM A351/A351M CF3M
Super duplex	URANUS B6

Kv values [m^3/h]

DN	40	50	65	80	100	125	150	200	250	300	350	400	450	500	600	700	800	900	1000	1200	1400
Kv	68	112	172	258	474	970	1680	2800	4310	6465	8620	10775	15086	18965	24137	36000	44000	58000	80500	110500	

Parts list

DN 25 to DN 100

Item	Designation
1	Body
2	Bearing
3	O-ring
4	Shaft
5	Seat (liner)
6	Disc
7	Washer
8	Circlip

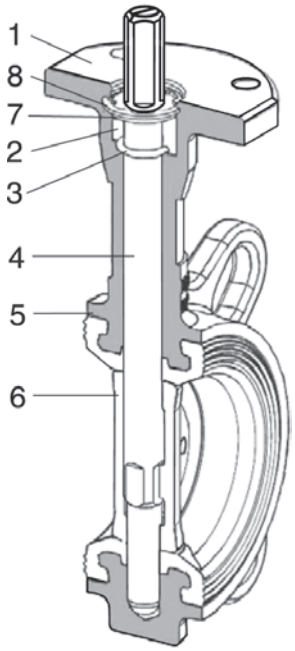

DN 125 to DN 200

Item	Designation
1	Body
2	Bearing
3	O-ring
4	Shaft
5	Seat (liner)
6	Disc
7	Lower axis
8	Circlip
9	Washer
10	Plug
11	Circlip
12	Bearing

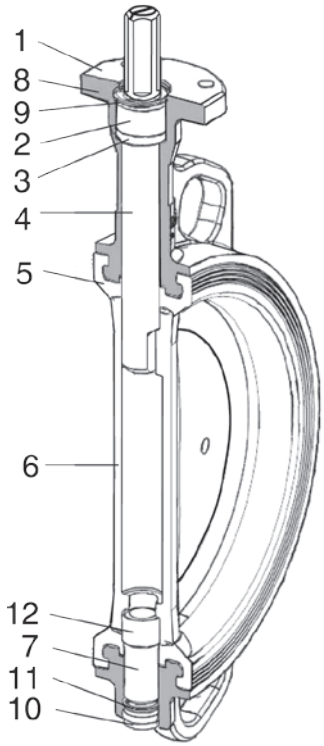

Order data

1 Type	Code
Butterfly valve with bare shaft	D480
Butterfly valve with pneumatic actuator	D481
Butterfly valve with manual operator	D487
Butterfly valve with motorized actuator	D488

2 Body configuration		Code
Wafer	(DN 25 - DN 1200)	W
Lug	(DN 25 - DN 600)	L
U section	(DN 200 - DN 1400)	U

3 Operating pressure

	DN	25	32	40	50	65	80	100	125	150	200	250	300	350	400	450	500	600	700	800	900	1000	1200	1400
PS 3bar	Code	0	0	0	0	0	0	0	0	0	0	0	0	0	0	0	0	0	0	0	0	0	0	0
PS 6bar	Code	1	1	1	1	1	1	1	1	1	1	1	1	1	1	1	1	1	1	1	1	1	1	1
PS 10bar	Code	2	2	2	2	2	2	2	2	2	**2**	**2**	**2**	**2**	**2**	**2**	**2**	**2**	**2**	**2**	**2**	**2**	**2**	**2**
PS 16bar	Code	**3**	**3**	**3**	**3**	**3**	**3**	**3**	**3**	**3**	3	3	3	3	3									
PS 25bar	Code	auf Anfrage																						

Standard

4 Connection

		DN	25	32	40	50	65	80	100	125	150	200	250	300	350	400	450	500	600	700	800	900	1000	1200	1400
Wafer	PN 6	Code	**3**	**3**	**3**		**3**	**3**	**3**	**3**	**3**	**3**	**3**	**3**											
	PN 10	Code	**3**	**3**	**3**	**3**	**3**	**3**	**3**	**3**	**3**	**3**	**3**	**3**	**3**	**3**	**3**	**3**	**3**	**3**	**3**	**3**	**3**	**3**	
	PN 16	Code	**3**	**3**	**3**	**3**	**3**	**3**	**3**	**3**	**3**	**3**	**3**	**3**	**3**	**3**	**3**	**3**	**3**	**3**	**3**	**3**	**3**	**3**	
Lug	PN 10	Code	3	3	3	3	3	3	3	3	3	**2**	**2**	**2**	**2**	**2**	**2**	**2**	**2**						
	PN 16	Code	**3**	**3**	**3**	**3**	**3**	**3**	**3**	**3**	**3**	3	3	3	3	3	3	3	3						
U-Sektion	PN 10	Code										**2**	**2**	**2**	**2**	**2**	**2**	**2**	**2**	**2**	**2**	**2**	**2**	**2**	**2**
	PN 16	Code										3	3	3	3	3	3	3	3	3	3	3	3	3	3

Standard

For further connections see page 9

5 Body material	Code
EN-GJS-400-15 (GGG 40), Epoxy coated, DN 25 - 600	2
EN-GJL-250 (GG 25), DN 700 - 1400	1
ASTM A351, CF8M, cast stainless steel 1.4408	4
ASTM A216 WCB, cast steel	5
DIN 1705 (Rg 10), cast bronze	on request
S 275 JR, Epoxy laminated carbon steel	9
EN-AC-47100, cast aluminium	0

6 Disc material	Code
CF8M, 1.4408	A
CF8M, 1.4408 polished	B
CF8M, 1.4408 Halar coated	C
1.4469 Super Duplex	D
EN-GJS-400-15 / GGG40, Epoxy coated (Resicoat)	E
EN-GJS-400-15 / GGG40 rubber lined EPDM	F
DIN 1705 (Rg 10), cast bronze	G
URANUS B6 Super Duplex 1.4539 (similar 904L)	K
EN-GJS-400-15, GGG40 Rilsan® PA11 coated (to DN 200)	R

7 Shaft material	Code
AISI 420 / 1.4021	1
AISI 316 / 1.4401 (max. operating pressure PS 10bar)	2
1.4462 Duplex (only with disc material code C, D, G, K)	4

8 Seat (liner) material		Code
EPDM	-20°C ... +110°C	E
EPDM / FDA	-20°C ... +130°C	L
EPDM (High temperature)	+20°C ...+130°C	T
EPDM (ACS, WRAS, DVGW-Water)	-20°C ... + 95°C	W

8 Seat (liner) material		Code
NBR	-10°C to + 90°C	N
FPM	-15°C to +210°C	V
HNBR	-10°C to +120°C	A
Butyl	-10°C to + 95°C	B
Epichlorhydrine	-40°C to +125°C	C
FPM glass reinforced	-15°C to +210°C	D
Flucast AB/P	-10°C to + 90°C	F
Flucast AB/E	-20°C to + 95°C	G
Hypalon	-25°C to +120°C	H
Flucast AB/N	-10°C to +100°C	K
Neoprene	-25°C to + 80°C	P
Silicone (steam)	-60°C to +140°C (red. operating press. max. 10bar)	R
Silicone	-60°C to +200°C	S

9 Liner fixing	Code
Loose liner (Standard)	L
Bonded liner	B
Vulcanized liner	V

10 Control function		Code
Butterfly valve with bare shaft	Typ D480	F
Butterfly valve with manual operator	Typ D487	0
Normally closed (NC),	Typ D481	1
Normally open (NO),	Typ D481	2
Double acting (DA),	Typ D481	3

11 Operator size	Code
D480	see page 10
D481	see page 13/16
D487	see page 11/12

Order example	1	DN	2	3	4	5	6	7	8	9	10	11
Code	D480	50	W	3	3	2	A	1	E	L	F	07 D11

Other designs and materials on request

Body dimensions [mm]

Body configuration - Wafer (code W)																		
DN	A	B	C	D	E	F	G	H	J	K	L	ISO	P	Q	R	S	T	Weight [kg]
25	102.5	60.2	33	68	18	11	90	15	100.0	85.0	8	F07	13.0	70	4x9			1.5
32	102.5	60.2	33	68	18	11	90	15	100.0	85.0	8	F07	13.0	70	4x9			1.5
40	110.0	56.0	33	76	18	11	90	26	110.0	95.0	10	F07	13.0	70	4x9			1.7
50	120.0	61.5	43	100	18	11	90	30	123.0	120.6	10	F07	13.0	70	4x9			2.0
65	135.0	69.0	46	108	18	11	90	47	145.0	127.0	10	F07	13.0	70	4x9			2.6
80	141.0	94.0	46	124	18	11	90	66	160.0	145.0	10	F07	13.0	70	4x9			3.1
100	135.0	106.0	52	147	18	11	90	90	185.5	165.0	10	F07	13.0	70	4x9			3.9
125	180.0	126.5	56	180	18	14	90	113	225.0	206.0	12	F07	17.0	70	4x9			6.1
150	193.0	133.0	56	206	18	14	90	139	241.3	229.0	12	F07	17.0	70	4x9			7.2
200	225.0	170.0	60	257	24	17	90	193	305.0	280.0	12	F07	20.3	70	4x9			11.0
250	282.5	210.0	68	324	32	22	130	241	362.0	335.0	14	F10	26.2	102	4x12	3	70	20.5
300	308.0	240.0	78	376	32	22	130	290	431.8	394.0	14	F10	26.2	102	4x12	3	70	29.5
350	338.5	263.0	78	430	32	22	160	338	476.3	445.0	15	F10	28.0	102	4x12	3	70	35.4
400	380.0	308.0	102	485	28	27	160	387	540.0	510.0	18	F12	33.0	125	4x14	4	85	54.6
450	380.5	340.0	114	536	37	36	190	437			20	F14	48.0	140	4x18	4	100	80.8
500	432.5	380.0	127	593	37	36	210	478			20	F14	48.0	140	4x18	4	100	113.3
600	494.0	440.0	154	690	47	46	210	578			24	F16		165	4x22	5	130	170.5
700	590.0	490.0	165	830	106	65	300	678			30	F25		254	8x18	5	200	290.9
800	630.0	565.0	190	902	106	80	300	767			28	F25		254	8x18	5	200	363.3
900	695.0	610.0	203	1010	125	80	350	867			32	F25		254	8x18	5	200	497.0
1000	770.0	675.0	216	1116	125	80	350	964			32	F25		254	8x18	5	200	598.5
1200	875.0	818.0	254	1334	125	100	350	1158			40	F30		298	8x23	5	230	931.5

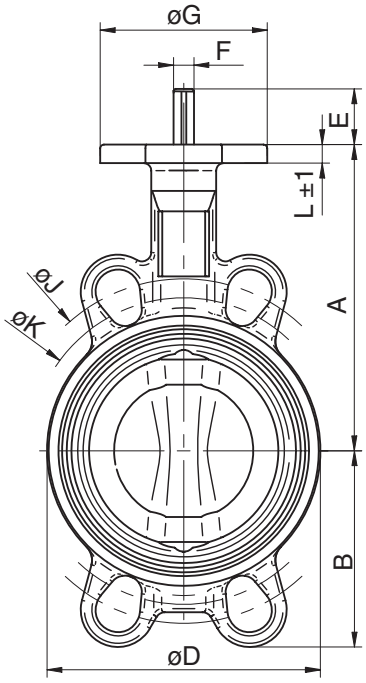

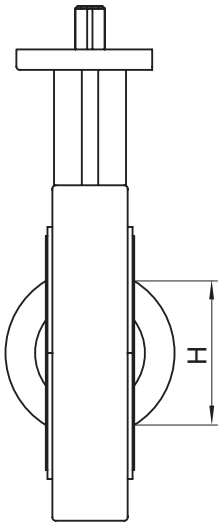

Shaft connection:
Square, diagonal
DN 32 - 600

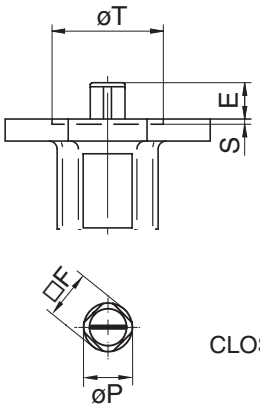

Shaft connection:
Round with single
keyway
DN 700 - 1200

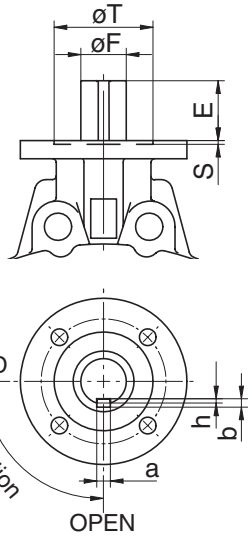

DN 32-450

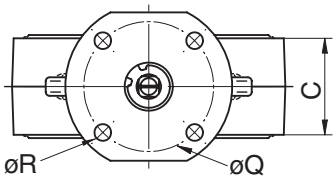

DN	F	a	b	h
700	65	18	11	7
800-1000	80	22	14	9
1200	100	28	16	10

Individual parts - Wafer [mm]

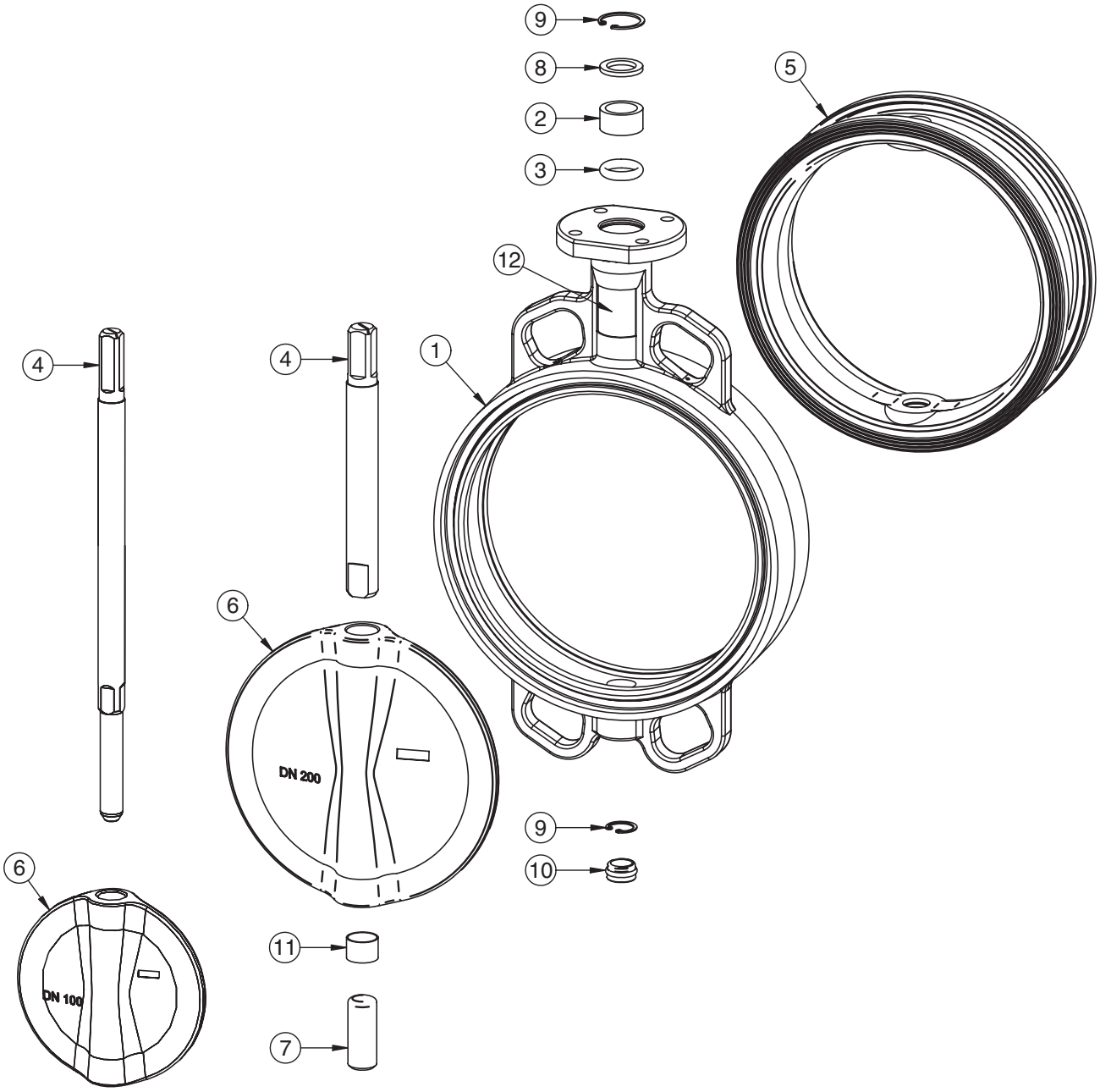

DN 32-100

DN 125-200

No.	Component	Material
1	Valve body	see Technical data
2	Bearing	Steel / PTFE
3	O-ring	Nitrile
4	Upper shaft	see Technical data
5	Seat (liner)	see Technical data
6	Disc	see Technical data
7	Lower shaft	see Technical data
8	Retaining ring	Zinc/steel
9	Circlip	Nickel/steel
10	Plug	EPDM
11	Bearing	Steel / PTFE
12	Marking	Polyester

Body dimensions [mm]

Body configuration - Lug (code L)																	
DN	A	B	C	D	E	F	G	H	J	L	ISO	P	Q	R	S	T	Weight [kg]
32	110.0	54.0	33	76	18	11	90	15	140	10	F07	13.0	70	4x9			2.0
40	110.0	54.0	33	76	18	11	90	26	140	10	F07	13.0	70	4x9			2.0
50	120.0	59.5	43	100	18	11	90	30	156	10	F07	13.0	70	4x9			2.9
65	135.0	66.5	46	108	18	11	90	47	175	10	F07	13.0	70	4x9			3.3
80	141.0	91.0	46	124	18	11	90	66	194	10	F07	13.0	70	4x9			4.8
100	165.0	105.0	52	147	18	11	90	90	224	10	F07	13.0	70	4x9			6.4
125	180.0	125.0	56	180	18	14	90	113	267	12	F07	17.0	70	4x9			9.9
150	193.0	136.5	56	206	18	14	90	139	292	12	F07	17.0	70	4x9			10.5
200	225.0	171.0	60	257	24	17	90	193	352	12	F07	20.3	70	4x9			13.9
250	282.5	210.0	68	324	32	22	130	241	409	14	F10	26.2	102	4x12	3	70	26.6
300	308.0	240.0	78	376	32	22	130	290	480	14	F10	26.2	102	4x12	3	70	39.5
350	338.5	263.0	78	430	32	22	160	338	522	18	F10	28.0	102	4x12	3	70	56.0
400	380.0	308.0	102	485	28	27	160	387	595	17	F12	33.0	125	4x14	4	85	73.6
450	380.5	340.0	114	536	37	36	190	437	633	20	F14	48.0	140	4x18	4	100	103.0
500	432.5	380.0	127	593	37	36	210	478	717	20	F14	48.0	140	4x18	4	100	149.0
600	494.0	440.0	154	690	47	46	210	578	833	24	F16		165	4x22	5	130	215.0

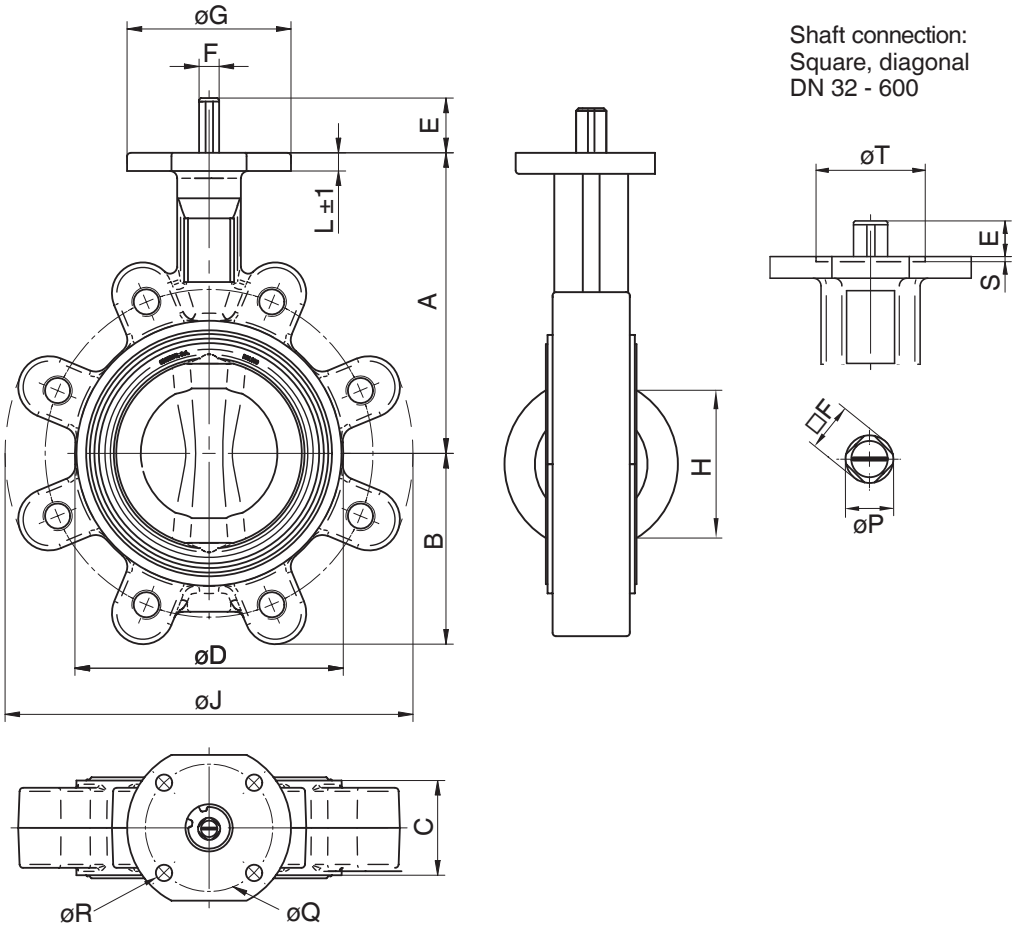

Body dimensions [mm]

Body configuration - U section (code U)																
DN	A	B	C	D	E	F	G	H	L	ISO	P	Q	R	S	T	Weight [kg]
200	225,0	172,5	60	345	24	17	90	193	12	F07	20,3	70	4x9			21,2
250	282,5	210,0	68	406	32	22	130	241	14	F10	26,2	102	4x12	3	70	32,1
300	308,0	243,0	78	480	32	22	130	290	14	F10	26,2	102	4x12	3	70	48,0
350	338,5	282,5	78	535	32	22	160	338	15	F10	28,0	102	4x12	3	70	56,4
400	380,0	308,0	102	597	28	27	160	387	18	F12	33,0	125	4x14	4	85	82,1
450	380,5	340,0	114	640	37	36	190	437	20	F14	48,0	140	4x18	4	100	108,9
500	432,5	380,0	127	700	37	36	210	478	20	F14	48,0	140	4x18	4	100	144,8
600	494,0	440,0	154	834	37	46	210	578	24	F16		165	4x22	5	130	223,5
700	590,0	490,0	165	910		65	300	678	30	F25		254	8x18	5	200	316,7
800	630,0	565,0	190	1065		80	300	767	28	F25		254	8x18	5	200	461,3
900	695,0	610,0	203	1120		80	350	867	32	F25		254	8x18	5	200	533,0
1000	770,0	675,0	216	1290		80	350	964	32	F25		254	8x18	5	200	722,5
1200	875,0	818,0	254	1485		100	350	1158	40	F30		298	8x23	5	230	1054,0
1400	1000,0	975,0	280	1685		120	350		40	F30		298	8x23	5	230	1600,0

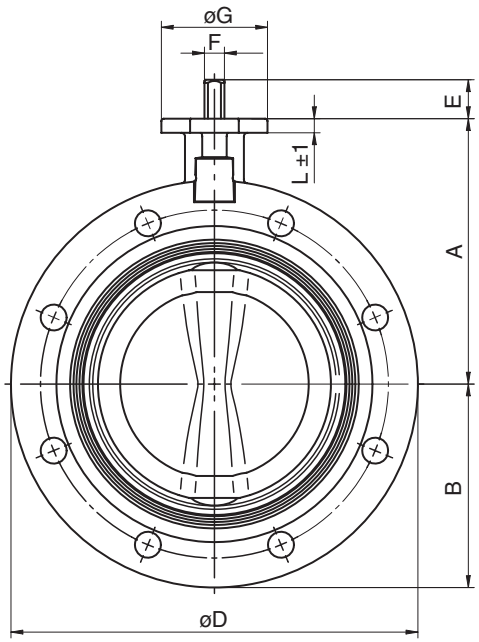

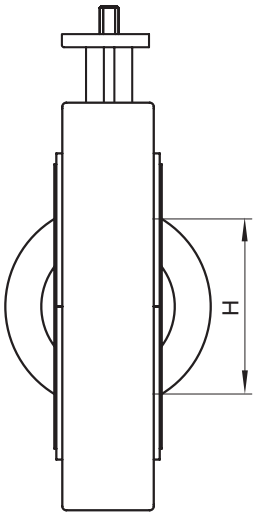

Shaft connection:
Square, diagonal
DN 32 - 600

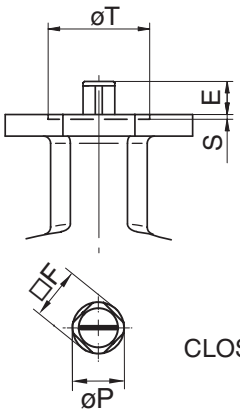

Shaft connection:
Round with single keyway
DN 700 - 1200

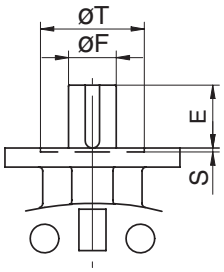

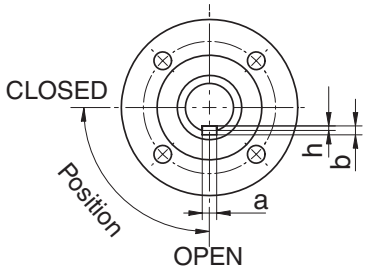

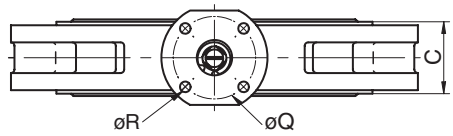

DN	F	a	b	h
700	65	18	11	7
800-1000	80	22	14	9
1200	100	28	16	10

Individual parts Lug / U section [mm]

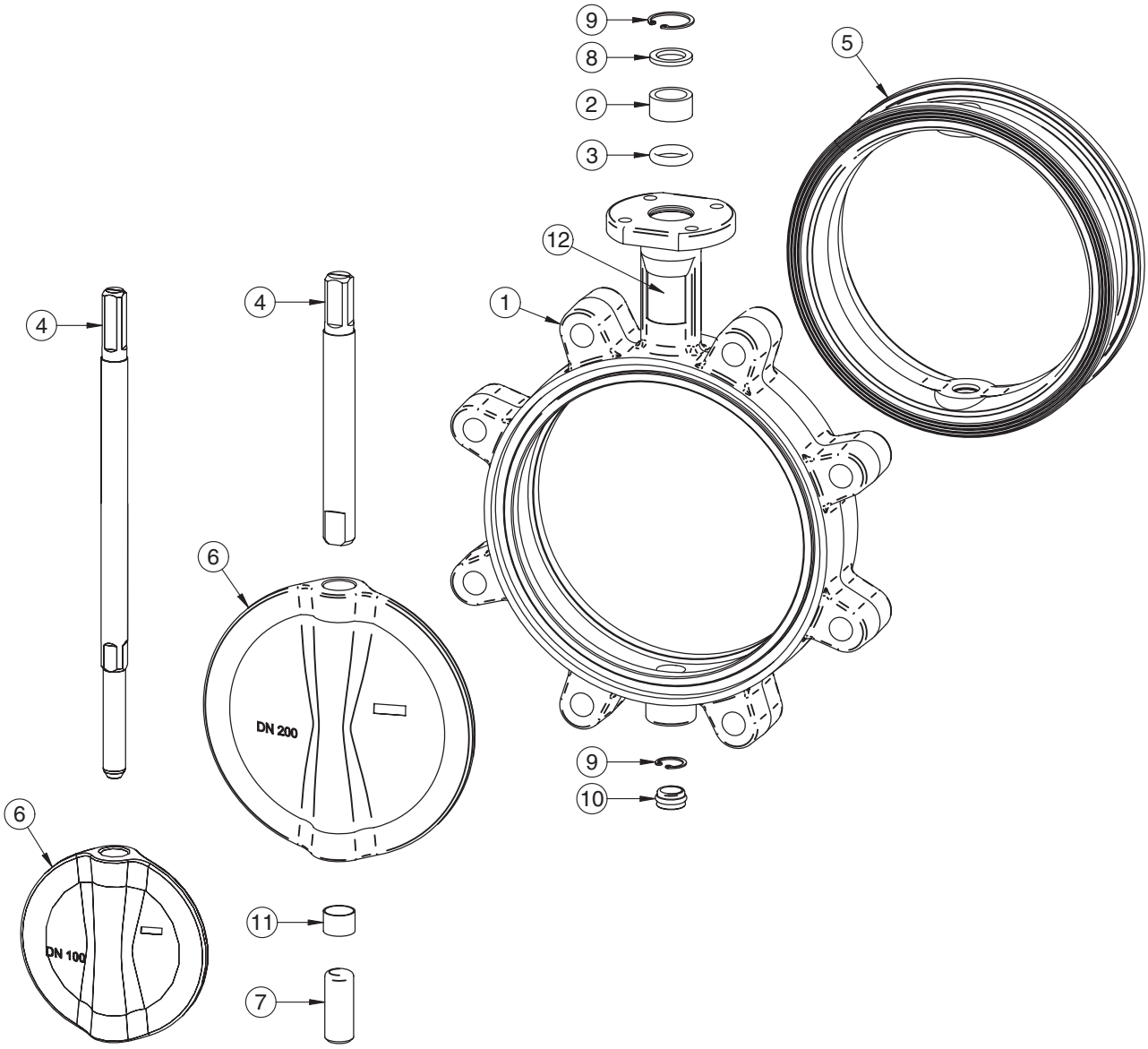

DN 32-100 DN 125-200

No.	Component	Material
1	Valve body	see Technical data
2	Bearing	Steel / PTFE
3	O-ring	Nitrile
4	Upper shaft	see Technical data
5	Seat (liner)	see Technical data
6	Disc	see Technical data
7	Lower shaft	see Technical data
8	Retaining ring	Zinc/steel
9	Circlip	Nickel/steel
10	Plug	EPDM
11	Bearing	Steel / PTFE
12	Marking	Polyester

Availability / code - Body configuration / connection

Wafer																							
	Nominal size																						
Flange	**25**	**32**	**40**	**50**	**65**	**80**	**100**	**125**	**150**	**200**	**250**	**300**	**350**	**400**	**450**	**500**	**600**	**700**	**800**	**900**	**1000**	**1200**
PN 6	3	3	3	a.A.	3	3	3	3	3	3	3	3	a.A.	a.A.	a.A.	a.A.	a.A.	-	a.A.	-	-	a.A.
PN 10	3	3	3	3	3	3	3	3	3	3	3	3	3	3	3	3	3	3	3	3	3	3
PN 16	3	3	3	3	3	3	3	3	3	3	3	3	3	3	3	3	3	3	3	3	3	3
ANSI 150 Lbs	D	D	D	D	D	D	D	D	D	D	D	D	D	D	D	D	D	D	D	D	D	a.A.
JIS 5k	o.r.	o.r.	o.r.	-	o.r.	o.r.	o.r.	o.r.	o.r.	o.r.	o.r.	o.r.	-	o.r.	o.r.	o.r.	o.r.	o.r.	o.r.	o.r.	o.r.	o.r.
JIS 10k	o.r.	o.r.	o.r.	o.r.	o.r.	o.r.	o.r.	o.r.	o.r.	o.r.	o.r.	o.r.	o.r.	o.r.	o.r.	o.r.	o.r.	o.r.	o.r.	o.r.	o.r.	o.r.
JIS 16k	o.r.	o.r.	o.r.	o.r.	o.r.	o.r.	o.r.	o.r.	o.r.	o.r.	o.r.	o.r.	o.r.	o.r.	-	o.r.	o.r.	o.r.	o.r.	o.r.	o.r.	o.r.
BS, D	o.r.	-	o.r.	o.r.	o.r.	o.r.	o.r.	o.r.	o.r.	o.r.	o.r.	o.r.	o.r.	o.r.	o.r.	o.r.	-	-	o.r.	o.r.	-	o.r.
BS, E	o.r.	-	o.r.	o.r.	o.r.	o.r.	o.r.	o.r.	o.r.	o.r.	o.r.	o.r.	o.r.	o.r.	o.r.	o.r.	-	-	o.r.	o.r.	-	o.r.

Lug																	
Flange	**25**	**32**	**40**	**50**	**65**	**80**	**100**	**125**	**150**	**200**	**250**	**300**	**350**	**400**	**450**	**500**	**600**
PN 6	1	1	1	1	1	1	1	1	1	1	1	1	1	1	1	1	1
PN 10	3	3	3	3	3	3	3	3	3	2	2	2	2	2	2	2	2
PN 16	3	3	3	3	3	3	3	3	3	3	3	3	3	3	3	3	3
ANSI 150 Lbs	D	D	D	D	D	D	D	D	D	D	D	D	a.A.	D	a.A.	D	D
JIS 5k	o.r.	o.r.	o.r.	-	o.r.	o.r.	o.r.	o.r.	o.r.	o.r.	o.r.	o.r.	o.r.	o.r.	o.r.	o.r.	o.r.
JIS 10k	o.r.	o.r.	o.r.	o.r.	o.r.	o.r.	o.r.	o.r.	o.r.	o.r.	o.r.	o.r.	o.r.	o.r.	o.r.	o.r.	o.r.
JIS 16k	o.r.	o.r.	o.r.	o.r.	o.r.	o.r.	o.r.	o.r.	o.r.	o.r.	o.r.	o.r.	o.r.	o.r.	o.r.	o.r.	o.r.
BS, D	o.r.	-	o.r.	o.r.	o.r.	o.r.	o.r.	o.r.	o.r.	o.r.	o.r.	o.r.	o.r.	o.r.	o.r.	o.r.	o.r.
BS, E	o.r.	-	o.r.	o.r.	o.r.	o.r.	o.r.	o.r.	o.r.	o.r.	o.r.	o.r.	o.r.	o.r.	o.r.	o.r.	o.r.

U section														
Flange	**200**	**250**	**300**	**350**	**400**	**450**	**500**	**600**	**700**	**800**	**900**	**1000**	**1200**	**1400**
PN 6	1	1	1	1	1	1	1	1	1	1	1	1	1	1
PN 10	2	2	2	2	2	2	2	2	2	2	2	2	2	2
PN 16	3	3	3	3	3	3	3	3	3	3	3	3	3	3
ANSI 150 Lbs	D	D	D	D	D	D	D	D	D	D	D	D	D	a.A.
JIS 5k	o.r.	o.r.	o.r.	-	o.r.	o.r.	o.r.	o.r.	o.r.	o.r.	o.r.	o.r.	o.r.	-
JIS 10k	o.r.	o.r.	o.r.	o.r.	o.r.	o.r.	o.r.	o.r.	o.r.	o.r.	o.r.	o.r.	o.r.	-
JIS 16k	o.r.	o.r.	o.r.	o.r.	o.r.	o.r.	o.r.	o.r.	o.r.	o.r.	o.r.	o.r.	o.r.	-
BS, D	o.r.	o.r.	o.r.	o.r.	o.r.	o.r.	o.r.	o.r.	-	-	o.r.	-	o.r.	-
BS, E	o.r.	o.r.	o.r.	o.r.	o.r.	o.r.	o.r.	o.r.	-	-	o.r.	-	o.r.	-

o.r. = on request

Operator size - Type D480 - Butterfly valve with bare shaft

Dimensions [mm] Operator flange								
DN	ISO	Q	Shaft connec-tion*	F	E	T	S	Code
25-32	F07	70	D	□11	18			07 D11
40	F07	70	D	□11	18			07 D11
50	F07	70	D	□11	18			07 D11
65	F07	70	D	□11	18			07 D11
80	F07	70	D	□11	18			07 D11
100	F07	70	D	□11	18			07 D11
125	F07	70	D	□14	18			07 D14
150	F07	70	D	□14	18			07 D14
200	F07	70	D	□17	24			07 D17
250	F10	102	D	□22	32	70	3	10 D22
300	F10	102	D	□22	32	70	3	10 D22
350	F10	102	D	□22	32	70	3	10 D22
400	F12	125	D	□27	28	85	4	12 D27
450	F14	140	D	□36	37	100	4	14 D36
500	F14	140	D	□36	37	100	4	14 D36
600	F16	165	D	□46	47	130	5	16 D46
700	F25	254	V	ø65	106	200	5	25 V65
800	F25	254	V	ø80	106	200	5	25 V80
900	F25	254	V	ø80	110	200	5	25 V80
1000	F25	254	V	ø80	110	200	5	25 V80
1200	F30	298	V	ø100	120	230	5	30 V100

* D = Square, diagonal (standard);
V = Round with single keyway

Shaft connection:
Square, diagonal
DN 32 - 600

Shaft connection:
Round with single keyway
DN 700 - 1200

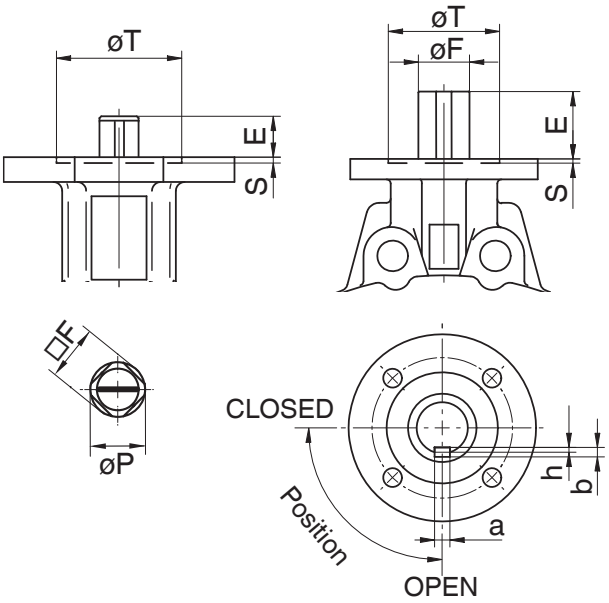

DN	F	a	b	h
700	65	18	11	7
800-1000	80	22	14	9
1200	100	28	16	10

Order data

Order example	D480	Order data butterfly valve (page 3)	07 D11
Type	D480		
Nominal size			
Body configuration (code)			
Operating pressure (code)			
Connection (code) only lugged and U section bodies			
Body material (code)			
Shaft material (code)			
Disc material (code)			
Seat (liner) material (code)			
Liner fixing (code)			
Control function (code)			
Operator size			07 D11

Dimensions / Code - Type D487 Butterfly valve with hand lever [mm]

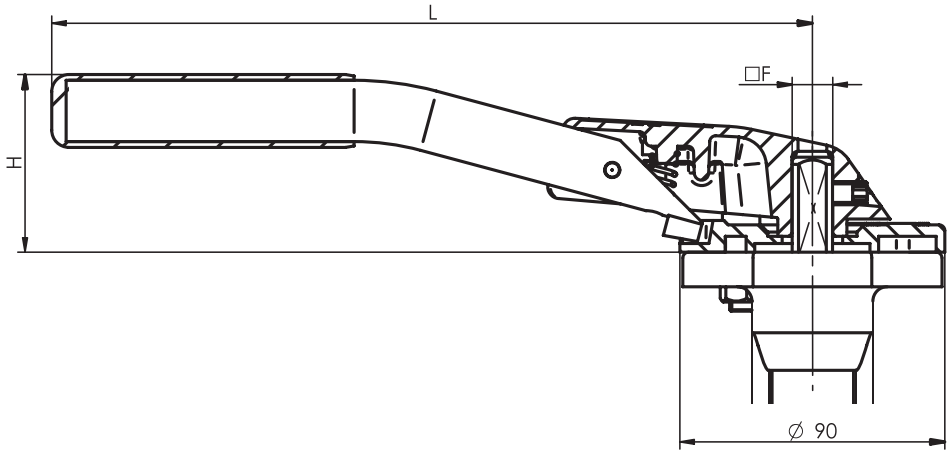

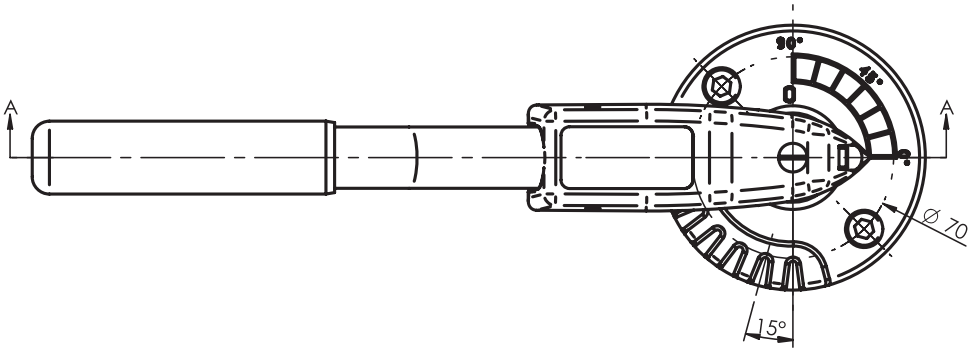

Hand lever							
DN	Order designation	Code	L	F	H	Weight [kg]	Top flange
DN 32 - 65	MHL-F0711-220	MHL1122	220	11	49	0.4	F07
DN 80 - 100	MHL-F0711-260	MHL1126	260	11	60	0.45	F07
DN 125 - 150	MHL-F0714-315	MHL1431	315	14	75	0.55	F07
DN 200	MHL-F0717-315	MHL1731	315	17	75	0.55	F07
DN 250 - 350	MHL-S-F1022-500*	MHL-S50	500	17	75	1.7	F10

*continuously adjustable

Order data - Butterfly valve with hand lever

Order example	D487	Order data butterfly valve (page 3)	MHL1731
Type	D487		
Nominal size			
Body configuration (code)			
Operating pressure (code)			
Connection (code) only lugged and U section bodies			
Body material (code)			
Shaft material (code)			
Disc material (code)			
Seat (liner) material (code)			
Liner fixing (code)			
Control function (code)			
Operator size			MHL1731

Dimensions gear box/Code - valve with manual operator [mm]

GB232

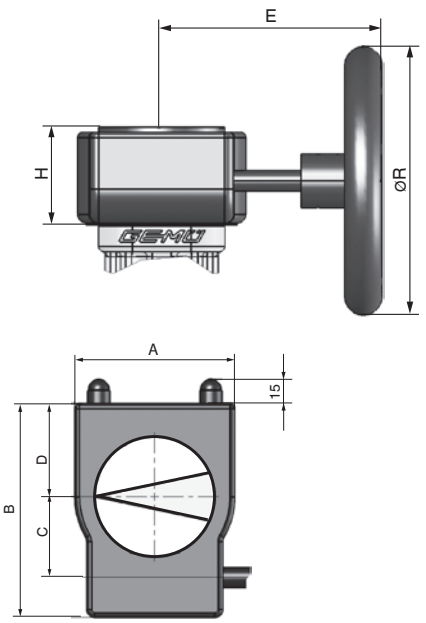

GB880N
GB1250N

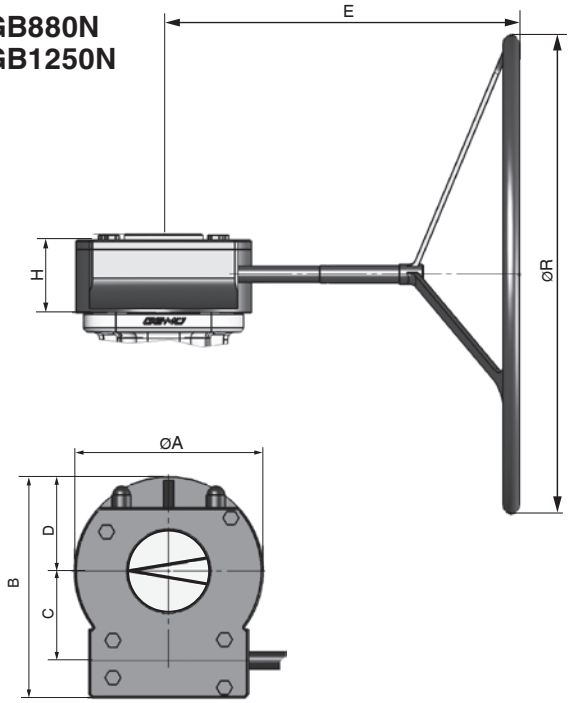

Gearbox / handwheel											
DN	Order designation	Code	A	B	C	D	E	H	ØR	n*	Weight [kg]
DN 32 -100	GB23205F05-F07 D11 PS100	GB232	80	114	42.5	48	105	53	100	10.0	0.8
DN 125	GB23205F05-F07 D14 PS100	GB232	80	114	42.5	48	105	53	100	10.0	0.8
DN 150	GB23206F05-F07 D14 PS160	GB232	80	114	42.5	48	155	59	160	10.0	0.9
DN 200	GB23206F05-F07 D17 PS160	GB232	80	114	42.5	48	155	59	160	10.0	0.9
DN 250 -300	GB23208F07-F10 D22 PS200	GB232	100	131	50	56	170	67	200	9.3	1.4
DN 350	GB23211F10-F12 D22 SG400	GB232	146	174	60	79	200	79	400	11.3	2.7
DN 400	GB23211F10-F12 D27 SG400	GB232	146	174	60	79	200	79	400	11.3	2.7
DN 450-500	GB1250NF12-F16 D36 SG700	GB1250	220	258	110	105	305	102	700	13.8	22.0

Material: Aluminium, polyurethane coated n*: Handwheel turns OPEN/CLOSED

Order data - Butterfly valve with handwheel

Order example	D487	Order data butterfly valve (page 3)	GB232
Type	D487		
Nominal size			
Body configuration (code)			
Operating pressure (code)			
Connection (code) only lugged and U section bodies			
Body material (code)			
Shaft material (code)			
Disc material (code)			
Seat (liner) material (code)			
Liner fixing (code)			
Control function (code)			
Operator size			GB232

Pneumatic actuator type ADA/ASR

Control medium	Control pressure
Filtered, dry compressed air, non-corrosive medium	6 - 8 bar

Temperature range	Angle of rotation		
-30°C to +100°C, other temperatures on request	(±5° adjustable)	(85° - 95°)	90°

Order data - Butterfly valve with pneumatic actuator Type ADA/ASR

Order example	D481	Order data butterfly valve (page 3)	B013AC0
Type	D481		see page 14
Nominal size			
Body configuration (code)			
Operating pressure (code)			
Connection (code) only lugged and U section bodies			
Body material (code)			
Shaft material (code)			
Disc material (code)			
Seat (liner) material (code)			
Liner fixing (code)			
Control function (code)			
Actuator size			B013AC0

Stroke limiter on request

Pneumatic actuator type ADA/ASR

Actuator size*				
Operating pressure 3 bar (see order data - operating pressure code 0)				
DN	**Pneumatic double acting**	**Code**	**Pneumatic single acting**	**Code**
32	ADA0080 F05F07YS17/S14A	B008AC0	ASR0080 S14F05F07YS17/S14A	A008KC0
40	ADA0080 F05F07YS17/S14A	B008AC0	ASR0080 S14F05F07YS17/S14A	A008KC0
50	ADA0080 F05F07YS17/S14A	B008AC0	ASR0080 S14F05F07YS17/S14A	A008KC0
65	ADA0080 F05F07YS17/S14A	B008AC0	ASR0080 S14F05F07YS17/S14A	A008KC0
80	ADA0080 F05F07YS17/S14A	B008AC0	ASR0080 S14F05F07YS17/S14A	A008KC0
100	ADA0080 F05F07YS17/S14A	B008AC0	ASR0080 S14F05F07YS17/S14A	A008KC0
125	ADA0080 F05F07YS17/S14A	B008AC0	ASR0130 S14F05F07YS17/S14A	A013KC0
150	ADA0080 F05F07YS17/S14A	B008AC0	ASR0130 S14F05F07YS17/S14A	A013KC0
200	ADA0130 F05F07YS17/S14A	B013AC0	ASR0300 S14F07F10YS22 A	A030KD0
250	ADA0200 F07F10YS17/S14A	B020AE0	ASR0500 S14 F10YS22 A	A050KF0
300	ADA0200 F07F10YS17/S14A	B020AE0	ASR0500 S14 F10YS22 A	A050KF0
350	ADA0300 F07F10YS22 A	B030AD0	ASR0850 S14F10F12YS27 A	A085KG0
400	ADA0850 F10F12YS27 A	B085AG0	ASR1750 S14 F14YS36 A	A175KK0
Operating pressure 6 bar (see order data - operating pressure code 1)				
32	ADA0080 F05F07YS17/S14A	B008AC0	ASR0080 S14F05F07YS17/S14A	A008KC0
40	ADA0080 F05F07YS17/S14A	B008AC0	ASR0080 S14F05F07YS17/S14A	A008KC0
50	ADA0080 F05F07YS17/S14A	B008AC0	ASR0080 S14F05F07YS17/S14A	A008KC0
65	ADA0080 F05F07YS17/S14A	B008AC0	ASR0080 S14F05F07YS17/S14A	A008KC0
80	ADA0080 F05F07YS17/S14A	B008AC0	ASR0080 S14F05F07YS17/S14A	A008KC0
100	ADA0080 F05F07YS17/S14A	B008AC0	ASR0080 S14F05F07YS17/S14A	A008KC0
125	ADA0080 F05F07YS17/S14A	B008AC0	ASR0130 S14F05F07YS17/S14A	A013KC0
150	ADA0080 F05F07YS17/S14A	B008AC0	ASR0200 S14F07F10YS17/S14A	A020KE0
200	ADA0130 F05F07YS17/S14A	B013AC0	ASR0300 S14F07F10YS22 A	A030KD0
250	ADA0300 F07F10YS22 A	B030AD0	ASR0850 S14F10F12YS27 A	A085KG0
300	ADA0300 F07F10YS22 A	B030AD0	ASR0850 S14F10F12YS27 A	A085KG0
350	ADA0500 F10YS22 A	B050AF0	ASR1200 S14F10F14YS36 A	A120KH0
400	ADA0850 F10F12YS27 A	B085AG0	ASR1750 S14 F14YS36 A	A175KK0
Operating pressure 10 bar (see order data - operating pressure code 2)				
32	ADA0080 F05F07YS17/S14A	B008AC0	ASR0080 S14F05F07YS17/S14A	A008KC0
40	ADA0080 F05F07YS17/S14A	B008AC0	ASR0080 S14F05F07YS17/S14A	A008KC0
50	ADA0080 F05F07YS17/S14A	B008AC0	ASR0080 S14F05F07YS17/S14A	A008KC0
65	ADA0080 F05F07YS17/S14A	B008AC0	ASR0080 S14F05F07YS17/S14A	A008KC0
80	ADA0080 F05F07YS17/S14A	B008AC0	ASR0080 S14F05F07YS17/S14A	A008KC0
100	ADA0080 F05F07YS17/S14A	B008AC0	ASR0130 S14F05F07YS17/S14A	A013KC0
125	ADA0080 F05F07YS17/S14A	B008AC0	ASR0200 S14F07F10YS17/S14A	A020KE0
150	ADA0130 F05F07YS17/S14A	B013AC0	ASR0300 S14F07F10YS22 A	A030KD0
200	ADA0200 F07F10YS17/S14A	B020AE0	ASR0500 S14 F10YS22 A	A050KF0
250	ADA0300 F07F10YS22 A	B030AD0	ASR0850 S14F10F12YS27 A	A085KG0
300	ADA0500 F10YS22 A	B050AF0	ASR1200 S14F10F14YS36 A	A120KH0
350	ADA0850 F10F12YS27 A	B085AG0	ASR1750 S14 F14YS36 A	A175KK0
400	ADA1200 F10F14YS36 A	B120AH0	ASR2100 S14 F16YS46 A	A210KL0
Operating pressure 16 bar (see order data - operating pressure code 3)				
32	ADA0080 F05F07YS17/S14A	B008AC0	ASR0080 S14F05F07YS17/S14A	A008KC0
40	ADA0080 F05F07YS17/S14A	B008AC0	ASR0080 S14F05F07YS17/S14A	A008KC0
50	ADA0080 F05F07YS17/S14A	B008AC0	ASR0080 S14F05F07YS17/S14A	A008KC0
65	ADA0080 F05F07YS17/S14A	B008AC0	ASR0080 S14F05F07YS17/S14A	A008KC0
80	ADA0080 F05F07YS17/S14A	B008AC0	ASR0080 S14F05F07YS17/S14A	A008KC0
100	ADA0080 F05F07YS17/S14A	B008AC0	ASR0200 S14F07F10YS17/S14A	A020KE0
125	ADA0130 F05F07YS17/S14A	B013AC0	ASR0300 S14F07F10YS22 A	A030KD0
150	ADA0130 F05F07YS17/S14A	B013AC0	ASR0300 S14F07F10YS22 A	A030KD0
200	ADA0300 F07F10YS22 A	B030AD0	ASR0850 S14F10F12YS27 A	A085KG0
250	ADA0500 F10YS22 A	B050AF0	ASR1200 S14F10F14YS36 A	A120KH0
300	ADA0850 F10F12YS27 A	B085AG0	ASR1750 S14 F14YS36 A	A175KK0
350	ADA1200 F10F14YS36 A	B120AH0	ASR2100 S14 F16YS46 A	A210KL0
400	ADA2100 F16YS46 A	B210AL0	ASR4000 S14F16F25YS55 A	A400KM0

*Technical data for liquids +20 to +80°C with control pressure 6 bar

Actuator dimensions ADA/ASR [mm]

Type ADA/ASR 0020 - 1750

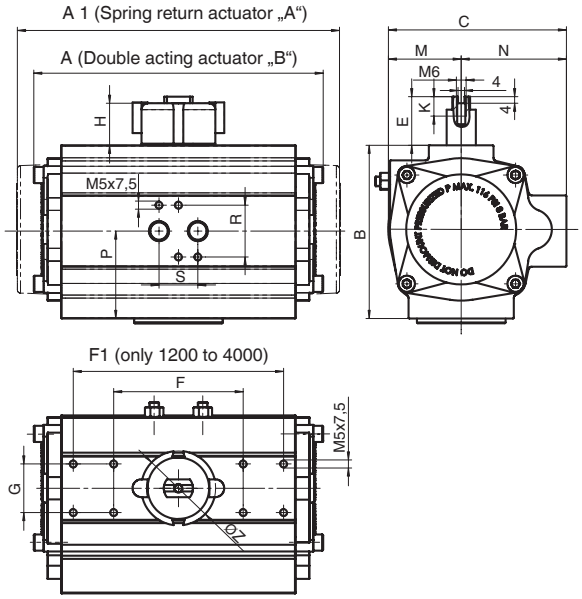

Type ADA/ASR 2500 - 4000

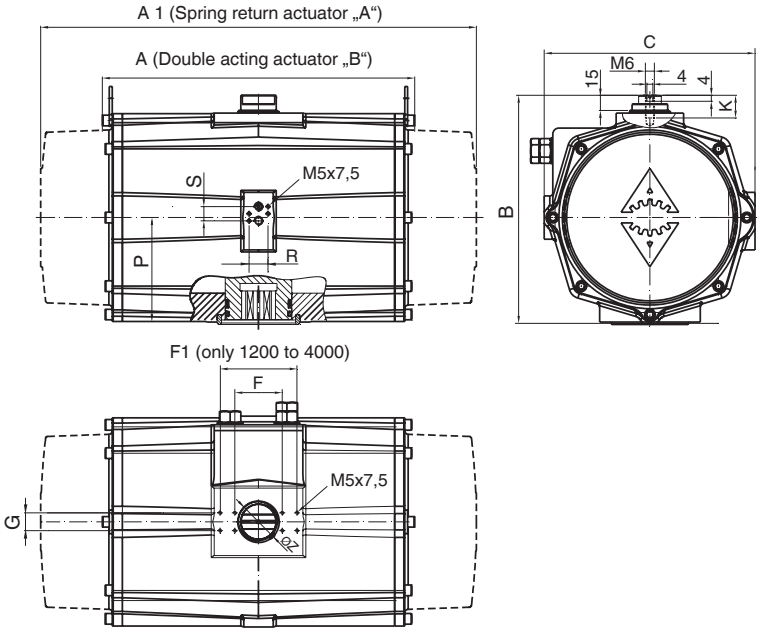

ADA/ASR	0020	0040	0080	0130	0200	0300	0500	0850	1200	1750	2500	4000
ISO 5211	F04	F04	F05/F07	F05/F07	F07/F10	F07/F10	F10	F10/F12	F10/F14	F14	F16	F16/F25
Square	11	11	17	17	17	22	22	27	36	36	46	55
Air connector	G¼	G¼	G¼	G¼	G¼	G¼	G¼	G¼	G¼	G¼	G¼	G¼
A	145	158	177	196	225	273	304	372	439	461	518	630
A1	163	195	217	258	299	348.5	397	473	560	601	738	940
B	66	85	107	117	135	182	169	191	219	250	383	434
C	76	91	111	122	135.5	152.5	173	191.5	212.5	242.5	356	415
E	30	30	30	30	30	30	30	30	30	30	15	15
F	80	80	80	80	80	80	80	80	80	80	80	80
F1	-	-	-	-	-	-	-	-	130	130	130	130
G	30	30	30	30	30	30	30	30	30	30	30	30
H	26.5	26.5	26.5	26.5	26.5	26.5	26.5	26.5	26.5	26.5	-	-
K	9	9	12	15	15	16	17	15	16	16	16	16
M	28	35	45	51	57	66.5	77	85	96	111	178.5	202
N	48	56	66	71	78	86	96	106	116	131	177.5	213
P	34	45	55	60	70	80	85	98	114	130	176.5	201
R	32	32	32	32	32	32	32	32	32	32	32	32
S	24	24	24	24	24	24	24	24	24	24	24	24
ØZ	46	46	46	46	46	54	64	64	80	81	81	91
Weight [kg]												
ADA	1.4	2.1	3.0	3.8	5.6	8.5	11.2	16.9	25.8	32.5	69.6	129.4
ASR	1.5	2.3	3.7	4.8	7.3	10.8	15.4	22.2	34.3	46.0	99.9	182.9

Pneumatic actuator type DR/SC

Control medium
Filtered, dry compressed air, non-corrosive medium

Control pressure
6 - 8 bar

Temperature range
-30°C to +100°C, other temperatures on request

Angle of rotation		
(±4° adjustable)	(86° - 94°)	90°

Order data - Butterfly valve with pneumatic actuator Type DR/SC

Order example	D481	Order data butterfly valve (page 3)	DU06AC0
Type	D481		see page 17
Nominal size			
Body configuration (code)			
Operating pressure (code)			
Connection (code) only lugged and U section bodies			
Body material (code)			
Shaft material (code)			
Disc material (code)			
Seat (liner) material (code)			
Liner fixing (code)			
Control function (code)			
Actuator size			DU06AC0

Stroke limiter on request

Pneumatic actuator type DR/SC

Actuator size*				
Operating pressure 3 bar (see order data - operating pressure code 0)				
DN	**Pneumatic double acting**	**Code**	**Pneumatic single acting**	
32	DR0030U F05F07NS14A	DU03AP0	SC0030U 6 F05F07NS14A	SU03KP0
40	DR0030U F05F07NS14A	DU03AP0	SC0030U 6 F05F07NS14A	SU03KP0
50	DR0030U F05F07NS14A	DU03AP0	SC0030U 6 F05F07NS14A	SU03KP0
65	DR0030U F05F07NS14A	DU03AP0	SC0060U 6 F05F07NS14A	SU06KP0
80	DR0030U F05F07NS14A	DU03AP0	SC0060U 6 F05F07NS14A	SU06KP0
100	DR0030U F05F07NS14A	DU03AP0	SC0060U 6 F05F07NS14A	SU06KP0
125	DR0060U F05F07NS17A	DU06AC0	SC0100U 6 F05F07NS17A	SU10KC0
150	DR0060U F05F07NS17A	DU06AC0	SC0150U 6 F05F07NS17A	SU15KC0
200	DR0100U F05F07NS17A	DU10AC0	SC0220U 6 F07F10NS22A	SU22KD0
250	DR0150U F07F10NS22A	DU15AD0	SC0300U 6 F07F10NS22A	SU30KD0
300	DR0150U F07F10NS22A	DU15AD0	SC0450U 6 F10F12NS27A	SU45KG0
350	DR0300U F07F10NS22A	DU30AD0	SC0600U 6 F10F12NS27A	SU60KG0
400	DR0600U F10F12NS27A	DU60AG0	SC2000U 6 F12NS27A	S20UKQ0
Operating pressure 6 bar (see order data - operating pressure code 1)				
32	DR0030U F05F07NS14A	DU03AP0	SC0030U 6 F05F07NS14A	SU03KP0
40	DR0030U F05F07NS14A	DU03AP0	SC0030U 6 F05F07NS14A	SU03KP0
50	DR0030U F05F07NS14A	DU03AP0	SC0030U 6 F05F07NS14A	SU03KP0
65	DR0030U F05F07NS14A	DU03AP0	SC0060U 6 F05F07NS14A	SU06KP0
80	DR0030U F05F07NS14A	DU03AP0	SC0060U 6 F05F07NS14A	SU06KP0
100	DR0030U F05F07NS14A	DU03AP0	SC0100U 6 F05F07NS17A	SU10KC0
125	DR0060U F05F07NS17A	DU06AC0	SC0150U 6 F05F07NS17A	SU15KC0
150	DR0100U F05F07NS17A	DU10AC0	SC0220U 6 F07F10NS22A	SU22KD0
200	DR0150U F07F10NS22A	DU15AD0	SC0300U 6 F07F10NS22A	SU30KD0
250	DR0220U F07F10NS22A	DU22AD0	SC0600U 6 F10F12NS27A	SU60KG0
300	DR0300U F07F10NS22A	DU30AD0	SC0600U 6 F10F12NS27A	SU60KG0
350	DR0300U F07F10NS22A	DU30AD0	SC0900U 6 F10F12NS27A	SU90KG0
400	DR0600U F10F12NS27A	DU60AG0	SC2000U 6 F12NS27A	S20UKQ0
Operating pressure 10 bar (see order data - operating pressure code 2)				
32	DR0030U F05F07NS14A	DU03AP0	SC0030U 6 F05F07NS14A	SU03KP0
40	DR0030U F05F07NS14A	DU03AP0	SC0030U 6 F05F07NS14A	SU03KP0
50	DR0030U F05F07NS14A	DU03AP0	SC0030U 6 F05F07NS14A	SU03KP0
65	DR0030U F05F07NS14A	DU03AP0	SC0060U 6 F05F07NS14A	SU06KP0
80	DR0030U F05F07NS14A	DU03AP0	SC0060U 6 F05F07NS14A	SU06KP0
100	DR0060U F05F07NS17A	DU06AC0	SC0100U 6 F05F07NS17A	SU10KC0
125	DR0100U F05F07NS17A	DU10AC0	SC0220U 6 F07F10NS22A	SU22KD0
150	DR0100U F05F07NS17A	DU10AC0	SC0220U 6 F07F10NS22A	SU22KD0
200	DR0150U F07F10NS22A	DU15AD0	SC0450U 6 F10F12NS27A	SU45KG0
250	DR0300U F07F10NS22A	DU30AD0	SC0600U 6 F10F12NS27A	SU60KG0
300	DR0450U F10F12NS27A	DU45AG0	SC1200U 6 F10F12NS27A	S12UKG0
350	DR0450U F10F12NS27A	DU45AG0	SC1200U 6 F10F12NS27A	S12UKG0
400	DR1200U F10F12NS27A	D12UAG0	SC3000U 6 F12ND27A	S30UKV0
Operating pressure 16 bar (see order data - operating pressure code 3)				
32	DR0030U F05F07NS14A	DU03AP0	SC0060U 6 F05F07NS14A	SU06KP0
40	DR0030U F05F07NS14A	DU03AP0	SC0060U 6 F05F07NS14A	SU06KP0
50	DR0030U F05F07NS14A	DU03AP0	SC0060U 6 F05F07NS14A	SU06KP0
65	DR0030U F05F07NS14A	DU03AP0	SC0060U 6 F05F07NS14A	SU06KP0
80	DR0030U F05F07NS14A	DU03AP0	SC0100U 6 F05F07NS17A	SU10KC0
100	DR0060U F05F07NS17A	DU06AC0	SC0150U 6 F05F07NS17A	SU15KC0
125	DR0100U F05F07NS17A	DU10AC0	SC0220U 6 F07F10NS22A	SU22KD0
150	DR0100U F05F07NS17A	DU10AC0	SC0300U 6 F07F10NS22A	SU30KD0
200	DR0220U F07F10NS22A	DU22AD0	SC0600U 6 F10F12NS27A	SU60KG0
250	DR0450U F10F12NS27A	DU45AG0	SC0900U 6 F10F12NS27A	SU90KG0
300	DR0600U F10F12NS27A	DU60AG0	SC2000U 6 F12NS27A	S20UKQ0
350	DR1200U F10F12NS27A	D12UAG0	SC3000U 6 F12ND27A	S30UKV0
400	DR2000U F12ND27A	D20UAV0	SC4000U 6 F16NS46A	S40UKL0

*Technical data for liquids +20 to +80°C with control pressure 6 bar

Actuator dimensions DR/SC [mm]

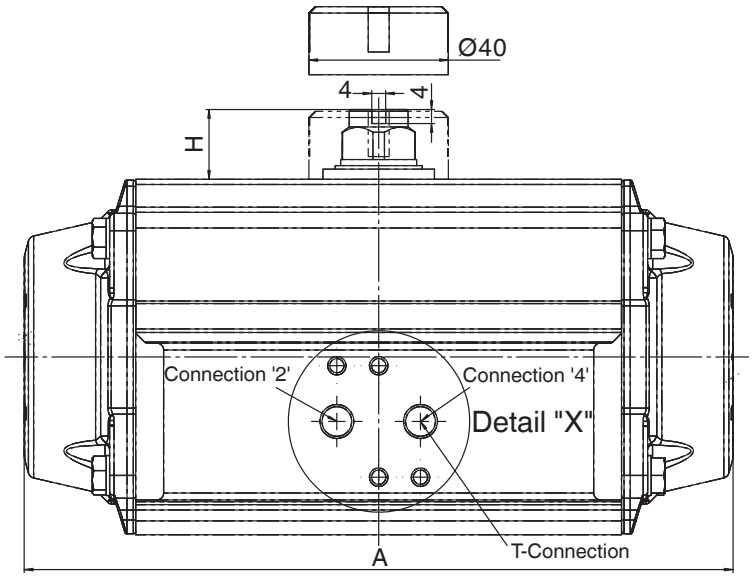

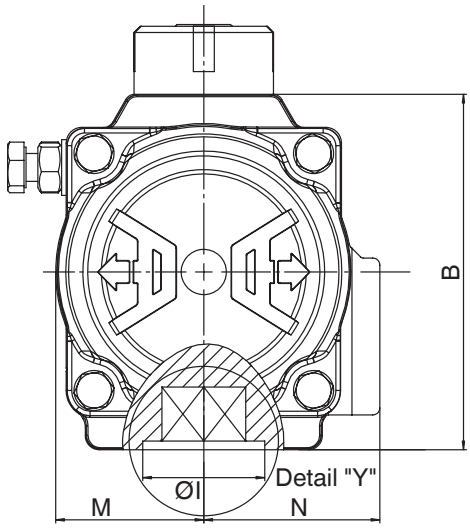

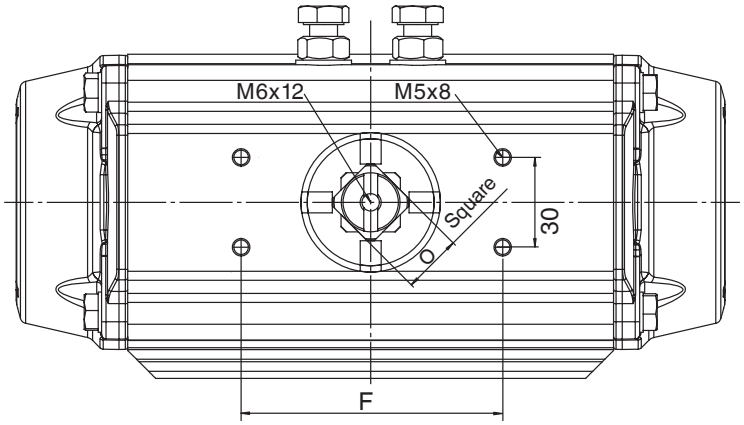

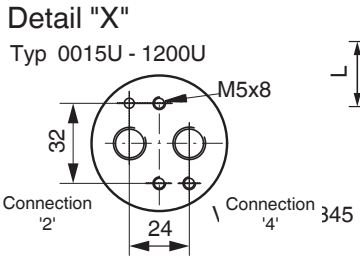

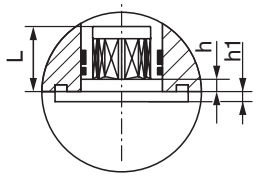

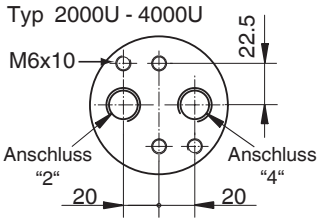

Typ	0015U	0030U	0060U	0100U	0150U	0220U	0300U	0450U	0600U	0900U	1200U	2000U	3000U	4000U	5000U
ISO Flange	F04	F04 F05/07	F05/07	F05/07	F07/10	F07/10	F07/10	F10/12	F10/12	F14	F14	F16	F16	F16	F25
Square	11	14	14	17	17	22	22	27	27	36	36	46	46	46	55
L	12	16	19	19	25	24	24	29	40	38	38	48	48	49	57
Air connector	G 1/8	G 1/8	G 1/8	G 1/8	G 1/4	G 1/4	G 1/4	G 1/4	G 1/4	G 1/4	G 1/4	G 3/8	G 1/2	G 1/2	G 1/2
A	136,0	153,5	203,5	241,0	259,0	304,0	333,0	394,5	422,5	474,0	528,0	605,0	710,0	812,0	876,0
B	69,0	85,0	102,0	115,0	127,0	145,0	157,0	177,0	196,0	220,5	245,0	298,5	330,0	383,0	410,0
F	80	80	80	80	80	80	80	80	80	130	130	130	130	130	130
H	20	20	20	20	20	30	30	30	30	50	50	50	50	50	50
Ø I	30	35	35	40	55	55	55	70	70	100	100	130	130	130	200
M	29,0	36,0	42,5	49,5	55,5	64,0	69,5	80,0	88,0	99,0	110,0	131,0	165,0	185,5	204,0
N	43,0	48,5	50,5	56,5	63,0	72,0	77,0	86,0	93,0	101,0	111,5	131,0	165,0	185,5	214,0
O	11	11	17	17	17	27	27	27	27	36	36	36	36	36	36
R	32	32	32	32	32	32	32	32	32	32	32	45	45	45	45
S	24	24	24	24	24	24	24	24	24	24	24	40	40	40	40
h	0,5	0,5	0,5	1,5	1,5	1,5	1,5	1,5	1,5	2	2	2,5	2,5	2,5	2,5
h1	1,5	1,5	2	1,5	2	2	2	3	3	3	3	2,5	2,5	4	3,5
L	11	11	19	19	19	19	25	32	40	40	40	40	40	57	57
Weight [kg]															
DR	1,0	1,6	2,7	3,8	5,4	8,4	10,2	14,5	19,8	25,0	35,5	53,0	83,0	118,0	134,0
SC	1,1	1,7	3,2	4,4	6,5	9,8	12,6	18,1	24,0	31,6	45,1	64,2	102,2	150,0	169,0

Instrumentation for quarter turn valves

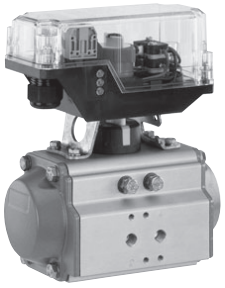

GEMÜ ES2
Electrical
position indicator
on pneumatic actuator

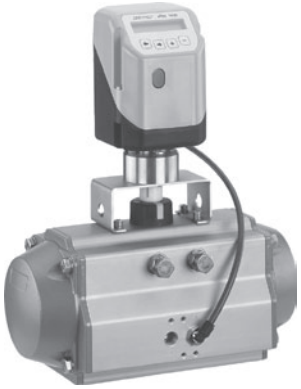

GEMÜ 1436 cPos
Intelligent positioner
and process controller
on pneumatic actuator

GEMÜ 1435 ePos
Intelligent positioner
on pneumatic actuator

GEMÜ 4221
Combi switchbox with
integrated pilot valve
on pneumatic actuator

For detailed information on electrical position indicators, combi switch-boxes and positioners for quarter turn valves please refer to the adjacent brochures.

Electrical position indicators and combi switchboxes

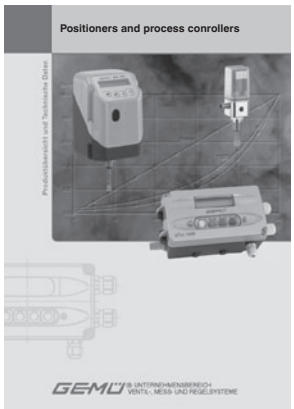

Positioners and process controllers

Other GEMÜ metal butterfly valves

GEMÜ 481
Victoria

GEMÜ 488
Victoria

GEMÜ 491

GEMÜ 487
Victoria

GEMÜ 490

GEMÜ 497

For further butterfly valves, accessories and other products, please see our Product Range catalogue and Price List. Contact GEMÜ.

GEMÜ® VALVES, MEASUREMENT AND CONTROL SYSTEMS

TÜVRheinland® CERT ISO 9001

GEMÜ Gebr. Müller · Apparatebau GmbH & Co. KG · Fritz-Müller-Str. 6-8 · D-74653 Ingelfingen-Criesbach · Tel. +49 (0) 7940/123-0 · Telefax +49 (0) 7940/123-224
info@gemue.de · www.gemue.de

Should there be any doubts or misunderstandings, the German version of this data sheet is the authoritative document!

Subject to alteration · 07/2011 · 88341459