Quarter Turn Actuator, Plastic

Construction

The GEMÜ 9428 motorized quarter turn actuator is a compact design where the motor and gear are combined as one unit in a plastic housing. It is designed for use with DC or AC voltages and utilises a DC motor with a secondary spur gear.
The 90° movement is achieved by a ballscrew and lever based on the scotch yoke principle. An optical position indicator is standard. The end positions are adjustable by means of micro-switches.

Advantages

- Low weight
- Optical position indicator as standard
- Integrated manual override
- With the 24V DC design an emergency power supply is possible by means of GEMÜ 1570 emergency power supply module

Overall hight 1
(Voltages 12V, 24V)

Actuator dimensions [mm]
Actuator version 1006, 1015, 2006, 2015

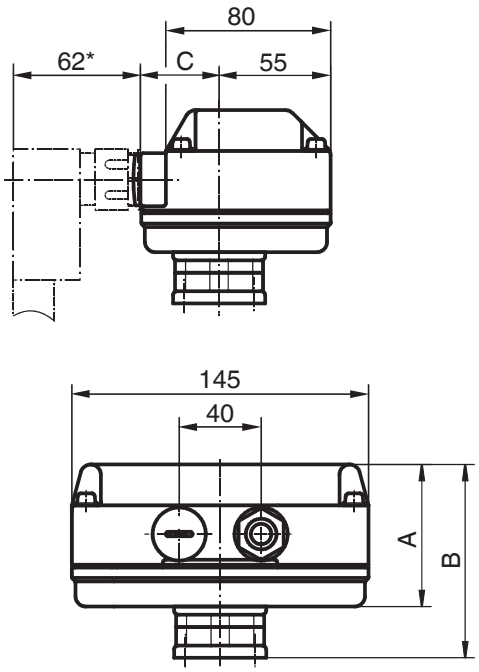

* Standard for supply voltage code O4*

Overall hight	A	B	C
1	68	95	49
2	94	121	53

Overall hight 2
(Voltages 100-250V, 50-60 Hz)

GEMÜ® 9428

Technical data

Electrical connection		
Supply voltages	**12V / 24V**	**100 - 250V AC**
Mains frequency	DC or 50/60 Hz	50/60 Hz
Power consumption	approx.. 24 W	approx. 30 W
Control input voltage	motor voltage	20 - 250V AC/DC
Control input current	-	typ. 1 mA
Rating	continuously rated	rated 40% ED
Type of connection	cable gland PG 13.5	Hirschmann plug type N6RFFS11 (PG 11)
Diameter of cable	7.5 ... 12.5 mm	7 ... 9 mm
Max. cross section of wire	1.5 mm^2	1,5 mm^2
Recomm. connection cablel	5x1 mm^2 Ölflex®	1 connector (standard): 7x1 mm^2 Ölflex®
Electrical protection	Motor protective system by customer	integrated stall and overload protection in addition excess current release T 1A 5x20 mm

Actuator materials		
Supply voltages	**12V / 24V**	**100 - 250V AC**
Housing base	PP (30% GF)	PP (30% GF)
Housing cover	PPO (10% GF)	PP (30% GF)
Indicator	PP-R natur	PP-R natur

Coordination Actuator version / Voltage/frequency					
Voltage/frequency (Code)	**B1**	**C1**	**B4**	**C4**	**O4**
Actuator version 1006	X	X	X	X	-
Actuator version 1015	X	X	-	-	-
Actuator version 2006	-	-	-	-	X
Actuator version 2015	-	-	X	X	X
Actuator version 3035	-	X	-	X	X

Torque characteristic

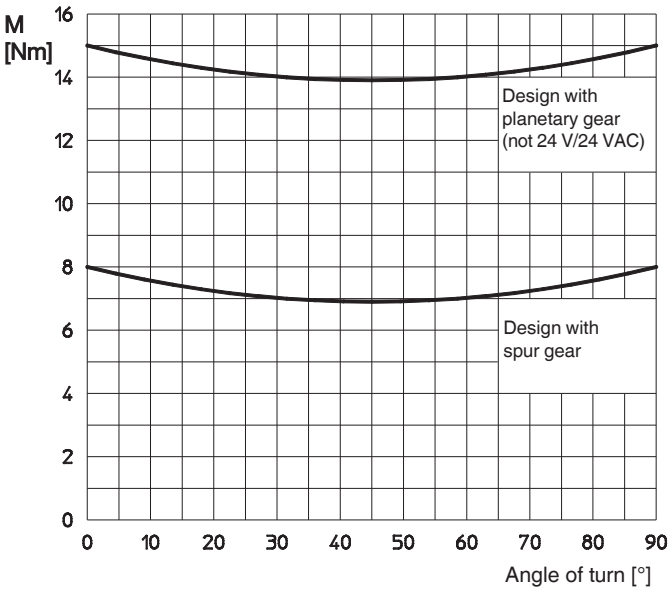

Travel

Nominal travel	90°
Max. travel	93°
Setting range limit switch Min.	-2 to 12°
Setting range limit switch Max.	76 to 91°

Admissible temperatures

Ambient temperature	-10 to +60° C
Storage temperature	-20 to +60° C

Protection class acc. to EN 60529

IP 65

Manual override

with Allen key SW3

Weight

Supply voltage 12V / 24V	970 g
Supply voltage 100-250V	1200 g
Supply voltage 24V/100-250V Actuator version 3035	2400 g

Order data

Fieldbus	Code
Without	000

Accessory	Code
Accessory	Z

Connection size	Code
Flange type G05	G05
Flange type F09 (only actuator version 3035)	F09

Location spigot	Code
Actuator with location spigot	Y

Square drive socket	Code
Star-shaped; SW8	S08

Voltage/frequency	Code
12V DC	B1
12V AC 50/60 Hz	B4
24V DC	C1
24V AC 50/60 Hz	C4
100-250V AC 50/60 Hz	O4

Functional module	Code
OPEN/CLOSE control standard	A0
OPEN/CLOSE control with 2 additional potential-free limit switches	AE

Actuator version	Code
Torque 6 Nm, operating time 4 sec; with spur gear; supply voltage B1,C1,B4,C4	1006
Torque 15 Nm, operating time 11 sec; with planetary gear; supply voltage B1/C1	1015
Torque 6 Nm, operating time 4 sec; with spur gear; supply voltage O4	2006
Torque 15 Nm, operating time 11 sec; with planetary gear; supply voltage B4/C4/O4	2015
Torque 35 Nm, operating time 15 sec; with planetary gear; supply voltage C1,C4,O4	3035*
* Availability: 4. quarter of 2009	

K-No.	Code
Connection with 1 Hirschmann socket DIN 43651 Type N6RFFS11 Cable diameter 7...9 mm; wire cross section up to 1.5 mm^2; PG11)*	K-Nr. 6598
Parallel operation*	K-Nr. 6410
* Not possible for supply voltage code O4	

Order example	9428	000	Z	G05	Y	S08	C1	A0	1006	-
Type	9428									
Fieldbus (code)		000								
Accessory (code)			Z							
Connection size (code)				G05						
Location spigot (code)					Y					
Square drive socket (code)						S08				
Voltage/frequency (code)							C1			
Functional module (code)								A0		
Actuator version (code)									1006	
K-No.										-

Dimensions actuator version 3035 [mm]

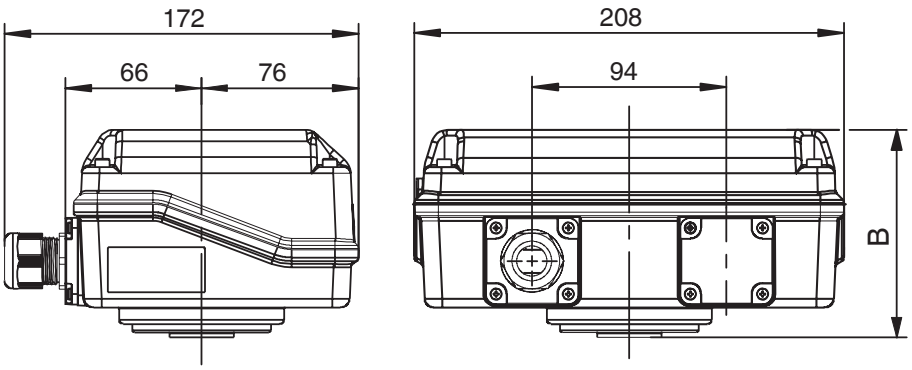

Spannungen	B
24V	100,5
100V - 250V	124,5

Valve connection dimensions [mm]

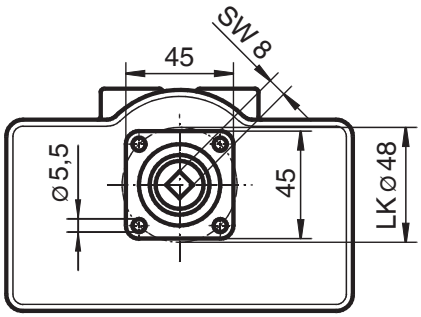

Connection / wiring diagram A0 - 12V / 24V DC (OPEN / CLOSE version)

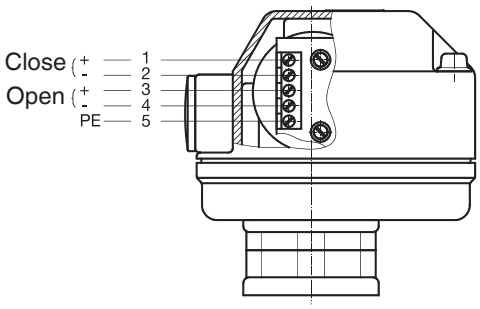

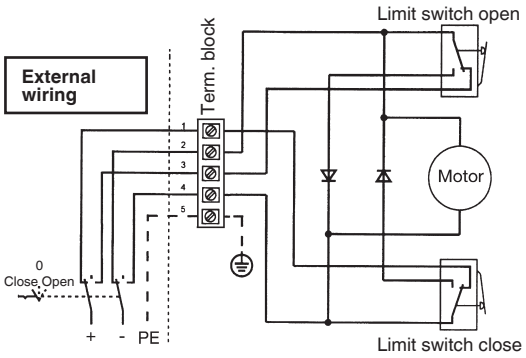

Terminals must <u>not</u> be bridged!
If parallel connection of several actuators is required, the variant with K-No. 6410 must be used.

Connection / wiring diagram A0 - 12V / 24V AC (OPEN / CLOSE version)

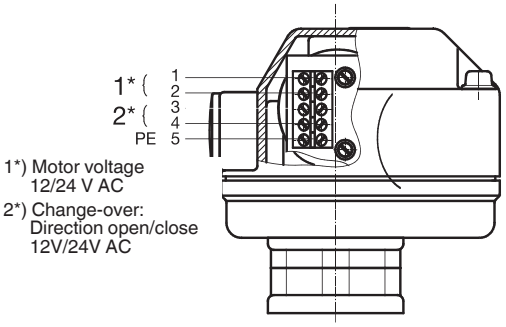

1*) Motor voltage 12/24 V AC
2*) Change-over: Direction open/close 12V/24V AC

Ad 2*) Change-over voltage: On = direction of travel „Open“
Off = direction of travel „Close“

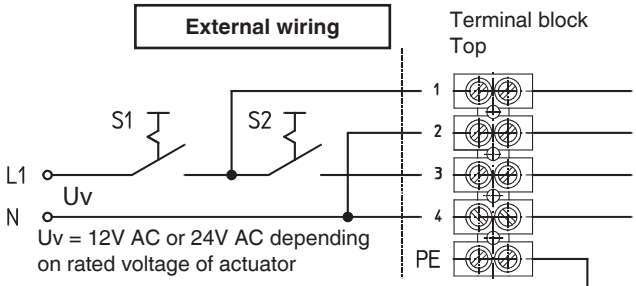

Uv = 12V AC or 24V AC depending on rated voltage of actuator

S1 = Actuator ON/OFF
S2 = Selection of direction
S2 = Off position = Direction „CLOSE
S2 = Working position = Direction „OPEN

Connection / wiring diagram AE - 12V / 24V DC (2 potential-free limit switches)

Connector type Hirschmann

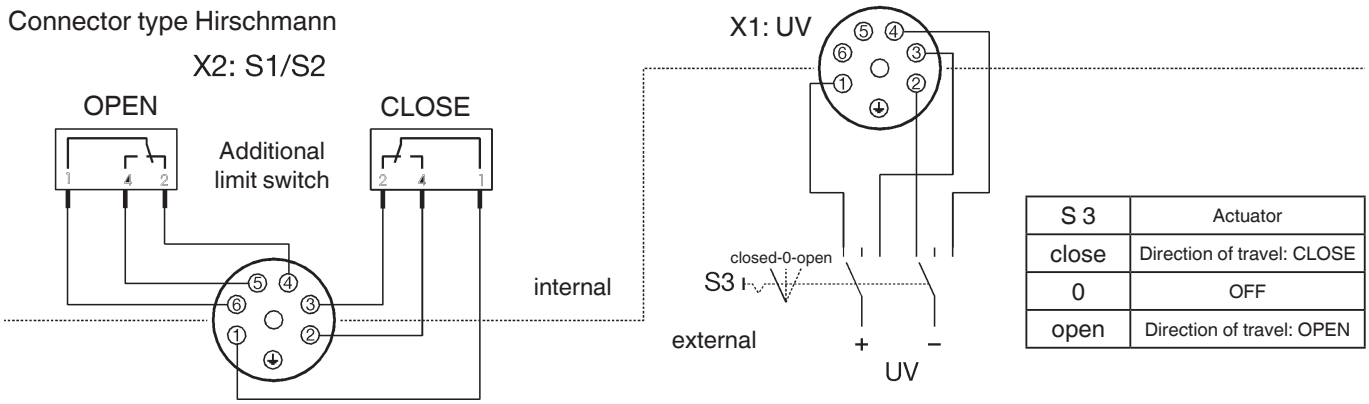

S 3	Actuator
close	Direction of travel: CLOSE
0	OFF
open	Direction of travel: OPEN

Connection / wiring diagram AE - 12V / 24V AC (2 potential-free limit switches)

Connector type Hirschmann

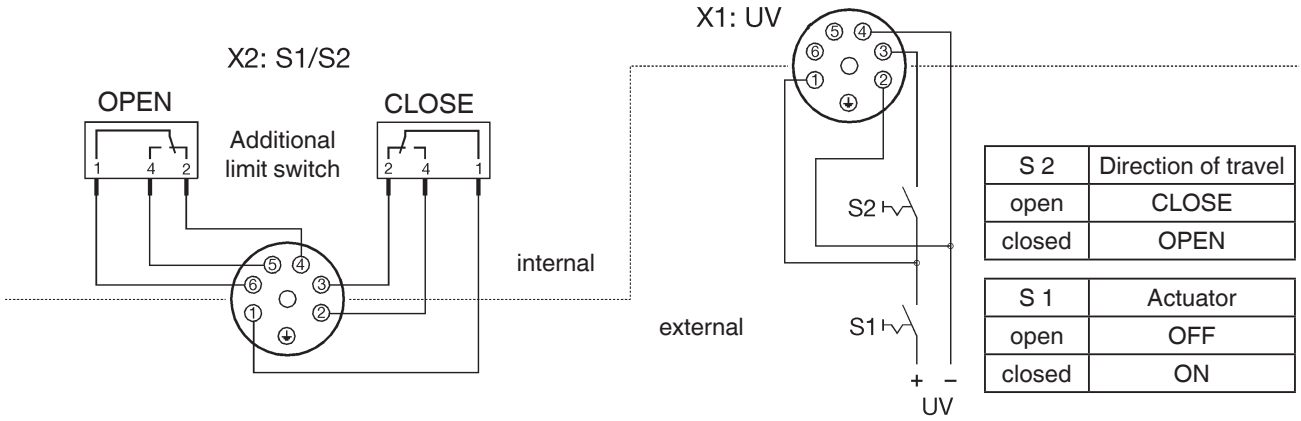

S 2	Direction of travel
open	CLOSE
closed	OPEN

S 1	Actuator
open	OFF
closed	ON

Connection / wiring diagram A0 - 100-250V AC (OPEN / CLOSE version)

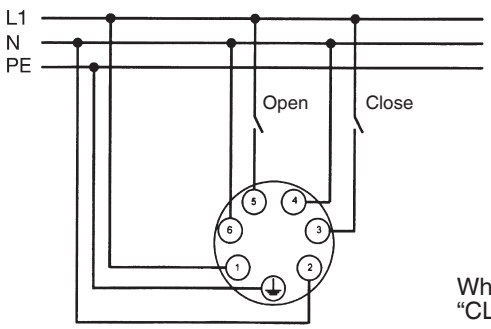

Pin	Signal name
1	L1 / L+, Supply voltage
2	N1 / L-, Supply voltage
3	L1 / L+, Direction of travel CLOSE
4	N / L-, Direction of travel CLOSE
5	L1 / L+, Direction of travel OPEN
6	N / L-, Direction of travel OPEN
⏚	PE, Protective earth conductor

When the OPEN and CLOSED switches are operated simultaneously the actuator “CLOSES”.
In the connector plug pins 2, 4 and 6 can be connected.
→ Advantage: 5-wire cable can be used.
No galvanic separation of inputs!

Connection / wiring diagram AE - 100-250V AC (2 potential-free limit switches)

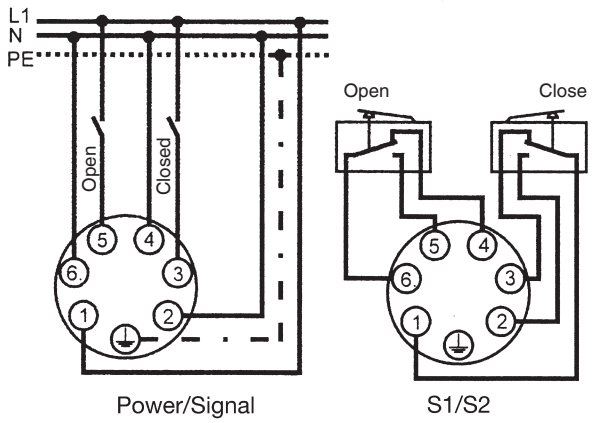

Pin	Signal name
1	L1 / L+, Supply voltage
2	N1 / L-, Supply voltage
3	L1 / L+, Direction of travel CLOSE
4	N / L-, Direction of travel CLOSE
5	L1 / L+, Direction of travel OPEN
6	N / L-, Direction of travel OPEN
⏚	PE, Protective earth conductor

N/L signals in the unit are separated.
Potential assignment by customer.

Pin	Signal name
1	S 1:1, Change-over contact limit switch CLOSE
2	S 1:4, Make-contact limit switch CLOSE
3	S 1:2, Break-contact limit switch CLOSE
4	S 2:2, Break-contact limit switch OPEN
5	S 2:4, Make-contact limit switch OPEN
6	S 2:1, Change-over contact limit switch OPEN
⏚	PE, Protective earth conductor

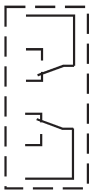

Accessories

Emergency power supply module GEMÜ 1570
(only for 24V DC design)

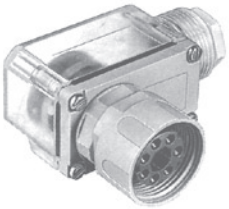

7-pin cable socket
Order no. 88084955

suitable for K-No. 6598 and functional module AE

For further actuators and other products, please see our Product Range catalogue and Price List.
Contact GEMÜ.

TÜV CERT
DIN EN ISO 9001
Zertifikat: 09 100 4136

GEMÜ® VALVES, MEASUREMENT AND CONTROL SYSTEMS

GEMÜ Gebr. Müller · Apparatebau GmbH & Co. KG · Fritz-Müller-Str. 6-8 · D-74653 Ingelfingen-Criesbach · Tel. +49 (0) 7940/123-0 · Telefax +49 (0) 7940/123-224
info@gemue.de · www.gemue.de

Should there be any doubts or misunderstandings, the German version of this data sheet is the authoritative document!

Subject to alteration · 08/2009 · 88048797