Ball Valve, Plastic

Aufbau

GEMÜ 710, 717 and 723 are 2/2 or 3/2-way plastic ball valves available in the sizes 1/2“ to 2“ (DN 8 to DN 50, GEMÜ 717 to DN 100).

GEMÜ 710 has a corrosion resistant low maintenance piston actuator which is available with “normally closed” and “double acting” control functions.

GEMÜ 717 manually operated valve has a low maintenance, corrosion-resistant operator.

GEMÜ 723 has a low maintenance electric actuator with a powerful DC motor. The rugged reduction gear in the motor, consisting of a threaded spindle with a lever, provides the rotation through 90°. An optical position indicator and a manual override are standard.

Features

- Suitable for inert and corrosive* liquid and gaseous media
- The union ended body enables the valve to be installed in the pipeline without additional components.

Advantages

- High flow capability
- GEMÜ 723 - Adjustable end positions by means of microswitches, Emergency power supply with 24 V DC types by means of emergency power supply module GEMÜ 1570 (not with actuator version 2070), Opening and closing behaviour is independent of the operating pressure
- Optional accessories for the 2/2-way ball valve:
  - Mounting plate DN 15 - 25 article no. 88290237
  - Mounting plate DN 32 - 50 article no. 88290238
  Please order separately.

*see information on working medium on page 2

Drawing

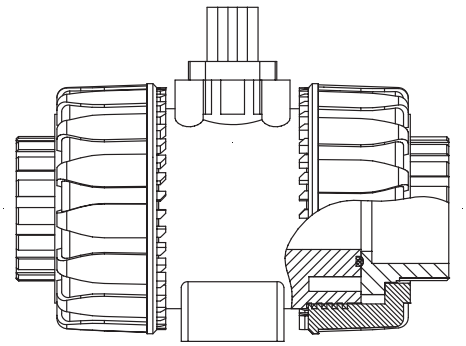

GEMÜ 710

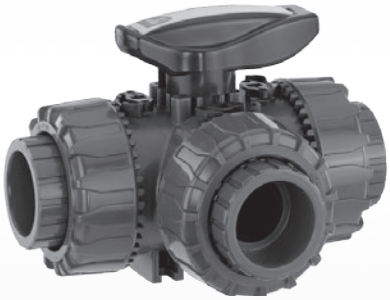

GEMÜ 717

GEMÜ 723

710, 717, 723

Technical data - GEMÜ 710, 717, 723

Working medium

Corrosive, inert, gaseous and liquid media which have no negative impact on the physical and chemical properties of the body and seal material.

Max. perm. pressure of working medium 10 bar
(for water and non-hazardous media to which the body material is resistant)

Maximum permissible temperature of working medium see diagram below

Tightness

Tightness: EN 12266-1 / leakage rate A

Pressure / temperature correlation

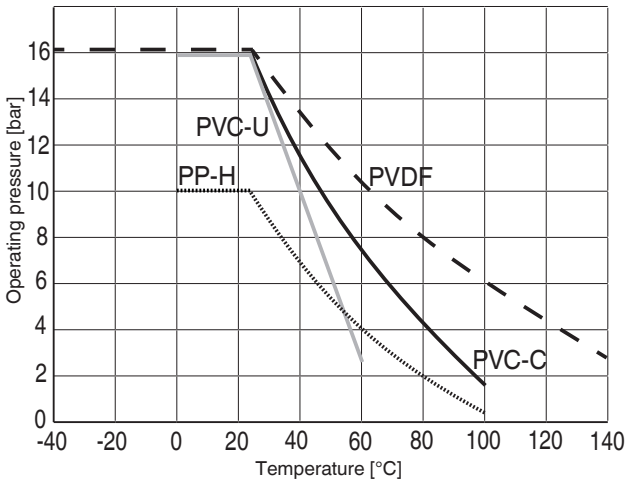

Kv-value [l/min]

DN	2/2-way (code D)	3/2-way (code M) / port positions				
10	80	37	25	40	78	48
15	200	55	35	65	195	73
20	385	135	95	145	380	150
25	770	205	140	245	760	265
32	1100	390	270	460	1050	475
40	1750	475	330	600	1700	620
50	3400	900	620	1200	3200	1220
65	5250	-	-	-	-	-
80	7100	-	-	-	-	-
100	9500	-	-	-	-	-
		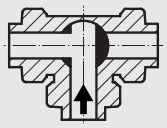	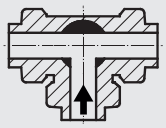	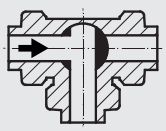	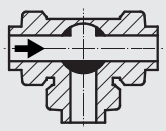	

Weight [g]

DN	PVC-U		PP		PVDF	
	2/2-way	3/2-way	2/2-way	3/2-way	2/2-way	3/2-way
10	215	310	-	-	291	310
15	205	310	145	195	272	310
20	330	550	218	350	445	550
25	438	790	298	505	584	790
32	693	1275	480	820	938	1275
40	925	1660	682	1070	1242	1660
50	1577	2800	1166	1795	2187	2800
65	4380	-	3090	-	5653	-
80	7200	-	5080	-	9590	-
100	11141	-	7725	-	14650	-

Technical data - GEMÜ 710, 717, 723

Inserts for connections other than standard solvent cement/welded sockets*					
DN	Butt weld spigots		Threaded sockets		
	Valve body material		Threads	Valve body material	
	PE	PP		PVC-U	PP
10	-	-	-	-	-
15	CVDE 020	CVDM 020	G 1/2	POFV 012	POFM 012
20	CVDE 025	CVDM 025	G 3/4	POFV 034	POFM 034
25	CVDE 032	CVDM 032	G 1	POFV 100	POFM 100
32	CVDE 040	CVDM 040	G 1 1/4	POFV 114	POFM 114
40	CVDE 050	CVDM 050	G 1 1/2	POFV 112	POFM 112
50	CVDE 063	CVDM 063	G 2	POFV 200	POFM 200
65	CVDE 075	CVDM 075	G 2 1/2	POFV 212	POFM 212
80	CVDE 090	CVDM 090	G 3	POFV 300	POFM 300
100	CVDE 110	CVDM 110	G 4	POFV 400	POFM 400

* Please order separately

Order data - GEMÜ 717 manually operated

Body configuration	Code
Straight through (2/2-way)	D
Multi-port (3/2-way)	M

Seal material	Code
FPM	4
PTFE	14

Connection	Code
Solvent cement/welded sockets (DIN)	2
Flanges EN 1092 / PN 10 / form B	4[1]
Union ends with inch inserts (socket)	33[2]
Flanges ANSI class 125/150 RF	39[1]

[1]only valve material PVC-U, PP-H (Code 1, 5)
[2]only valve material PVC-U (Code 1)

Control function	Code
Manually operated	0
Manually operated with lockable hand lever	0

Valve body material	Code
PVC-U	1
PP, polypropylene reinforced	5
PVDF, polyvinylidenfluoride	20

Ball configuration (only with body type M)	Code
T-port	T
L-port	L

Order example	717	15	M	2	1	14	0	T
Type	717							
Nominal size		15						
Body configuration (code)			M					
Connection (code)				2				
Valve body material (code)					1			
Seal material (code)						14		
Control function (code)							0	
Ball configuration (code)								T

Technical data GEMÜ 710 - pneumatically operated

Control pressure [bar]						
	Control function 1			Control function 3		
	Actuator			Actuator		
DN	0	1	3	0	1	2
15	5.5 - 6.0	-	-	3.0 - 6.0	-	-
20	5.5 - 6.0	-	-	3.0 - 6.0	-	-
25	5.5 - 6.0	-	-	3.0 - 6.0	-	-
32	-	5.5 - 6.0	-	-	2.0 - 6.0	-
40	-	5.5 - 6.0	-	-	2.0 - 6.0	-
50	-	5.5 - 6.0	-	-	2.0 - 6.0	-
65	-	-	4.5 - 5.0	-	5.0 - 6.0	-
80	-	-	4.8 - 5.0	-	-	4.0 - 6.0
100	-	-	5.0	-	-	5.0 - 6.0

All pressures are given as gauge pressures.

Control medium	
Inert gases	
Max. control pressure	6 bar
Max. perm. temperature of control medium	60 °C
Filling volume actuator 0	0.05 dm^3
Filling volume actuator 1	0.20 dm^3
Filling volume actuator 2	0.50 dm^3
Filling volume actuator 3	1.50 dm^3
Other control media upon request	

Order data

Body configuration	Code
Straight through (2/2-way)	D
Multi-port (3/2-way)	M

Connection	Code
Solvent cement/welded sockets (DIN)	2
Flanges EN 1092 / PN 10 / form B	4[1]
Union ends with inch inserts (socket)	33[2]
Flanges ANSI class 125/150 RF	39[1]

[1]only valve material PVC-U, PP-H (Code 1, 5)
[2]only valve material PVC-U (Code 1)

Valve body material	Code
PVC-U	1
PP, polypropylene reinforced	5
PVDF, polyvinylidenfluoride	20

Seal material	Code
FPM	4
PTFE	14

Control function	Code
Normally closed (NC)	1
Double acting (DA)	3

Actuator size (see table below)	Code
Actuator ø 50 mm	0
Actuator ø 70 mm	1
Actuator ø 100 mm	2
Actuator ø 140 mm	3

Selection table for actuator size		
DN	Control function 1	Control function 3
10	0	0
15	0	0
20	0	0
25	1	0
32	1	1
40	1	1
50	1	1
65	2	2
80	3	3
100	3	3

Ball configuration (only with body type M)	Code
T-port	T
L-port	L

Order example	710	15	M	2	1	14	1	0	T
Type	710								
Nominal size		15							
Body type (code)			M						
Connection (code)				2					
Valve body material (code)					1				
Seal material (code)						14			
Control function (code)							1		
Actuator size (code)								0	
Ball configuration (code)									T

Technical data GEMÜ 723 with motorized actuator

Protection class to EN 60529
IP 65

Permissible temperatures	
Ambient temperature	-10 to +60° C
Storage temperature	-20 to +60° C

Travel	
Nominal travel	90°
Max. travel	93°
Actuator version 1006, 1015, 2006, 2015 Setting range limit switch Min. Setting range limit switch Max.	 -2 to 12° 76 to 91°
Actuator version 2070 Setting range limit switch Min. Setting range limit switch Max.	 0 to 20° 70 to 93°

Manual override
With Allen key SW3 for actuator version 1006, 1015
With hand crank for actuator version 2006, 2015, 2070

Actuator materials			
Actuator version	**1006, 1015**	**2006, 2015**	**2070**
Housing base	PP (30% glass reinforced)	PP (30% glass reinforced)	ABS
Housing cover	PPO (10% glass reinforced)	PP (30% glass reinforced)	ABS
Optical position indicator	PPR natural	PPR natural	PPR natural

Electrical connection						
Actuator version	**1006, 1015, 2006, 2015**		**2070**			
Supply voltages	**12V / 24V**	**100 - 250V**	**24V, 120V, 230V**			
Functional module	**A0,AE**		**A0,AE, AP**	**00,0E, 0P**	**E1**	**E2**
Control input voltage	Motor voltage	20 - 250V AC/DC	24 - 250V AC/DC	Motor voltage	0 ... 10V	-
Control input current	-	typ. 1 mA	typ. 1 mA			0/4 ... 20 mA
Rating	Continuously rated	rated 40%	Continuously rated			
Connection	Cable connection PG 13.5	Hirschmann plug type N6RFFS11	Flange plug Binder 692/693			
Cable diameter	7.5 to 12.5 mm	7 to 9 mm	max. 8 mm			
Max. cross section of wire	1.5 mm^2	1.5 mm^2	0.75 mm^2			
Recommended connection cable	5x1 mm^2 Ölflex®	1 connector (standard): 7x1 mm^2 Ölflex®	7x1 mm^2 Ölflex®			
Overload protection	Motor protective system by customer	Integrated stall and overload protection plus excess current release T 1A 5x20 mm	Motor protective system by customer			

Power consumption [W]											
Voltage/ Frequency		**B1 12 V DC**	**C1 24 V DC**		**B4 12 V AC**	**C4 24 V AC**		**G4 120 V AC**		**L4 230 V AC**	**O4 100-250 V AC**
Functional module		**A0,AE**	**A0,AE,AP E1,E2**	**00,0E 0P**	**A0,AE**	**A0,AE,AP E1,E2**	**00,0E 0P**	**A0,AE,AP E1,E2**	**00,0E 0P**	**A0,AE,AP E1,E2**	**A0,AE,AP E1,E2**
Actuator version	1006	24	24	-	24	24	-	-	-	-	-
	2006	-	-	-	-	-	-	-	-	-	30
	1015	24	24	-	-	-	-	-	-	-	-
	2015	-	-	-	24	24	-	-	-	-	30
	3035	-	24	-	-	24	-	-	-	-	30
	2070	-	96	63	-	-	63	160	90	161	-

Technical data GEMÜ 723 with motorized actuator

Correlation Actuator version (torque) / Voltage-frequency								
Voltage/Frequency		B1 12 V DC	C1 24 V DC	B4 12 V AC	C4 24 V AC	G4 120 V AC	L4 230 V AC	O4 100-250 V AC
Actuator version	1006 (6 Nm)	X	X	X	X	-	-	-
	2006 (6 Nm)	-	-	-	-	-	-	X
	1015 (15 Nm)	X	X	-	-	-	-	-
	2015 (15 Nm)	-	-	X	X	-	-	X
	3035 (35 Nm)	-	X	-	X	-	-	X
	2070 (70 Nm)	-	X	-	X	X	X	-

Correlation Actuator version (torque) / Functional module / Nominal size														
Actuator version (torque) / Functional module									Actuator version (torque) / Nominal size					
Actuator version	Functional module								DN					
	A0	AE	AP	E2	E1	00	0E	0P	15	20	25	32	40	50
1006 (6 Nm)	X	X	-	-	-	-	-	-	X	X	X	-	-	-
2006 (6 Nm)	X	X	-	-	-	-	-	-	X	X	X	-	-	-
1015 (15 Nm)	X	X	-	-	-	-	-	-	X	X	X	X	X	-
2015 (15 Nm)	X	X	-	-	-	-	-	-	X	X	X	X	X	-
3035 (35 Nm)	X	X	-	-	-	-	-	-						
2070 (70 Nm)	X	X	X	X	X	X	X	X	-	-	-	-	-	X

Note: For connection and wiring diagrams for motorized GEMÜ actuators see data sheet

Actuator version code 1006, 1015, 2006, 2015, 3035 - Data sheet GEMÜ 9428
Actuator version code 2070, 4100, 4200, 6400 - Data sheet GEMÜ 9468

Order data GEMÜ 723 with motorized actuator

Body configuration	Code
Straight through body (2/2-way)	D
Multi-port body (3/2-way)	M

Connection	Code
Solvent cement/welded sockets (DIN)	2
Flanges EN 1092 / PN 10 / form B	4[1]
Union ends with inch inserts (socket)	33[2]
Flanges ANSI class 125/150 RF	39[1]
[1]only valve material PVC-U, PP-H (Code 1, 5) [2]only valve material PVC-U (Code 1)	

Valve body material	Code
PVC-U	1
PP, polypropylene reinforced	5
PVDF, polyvinylidenfluoride	20

Seal material	Code
FPM	4
EPDM	14

Voltage/Frequency	Code
12 V DC	B1
12 V 50/60 Hz	B4
24 V DC	C1
24 V 50/60 Hz	C4
100-250 V 50/60 Hz	O4
230 V 50/60 Hz	L4

Functional module	Code
Standard OPEN/CLOSE control	A0
OPEN/CLOSE control with 2 additional potential-free limit switches	AE
OPEN/CLOSE control with potentiometer output	AP
Control module for external set value 0 - 10V DC	E1
Control module for external set value 0/4 - 20 mA	E2
OPEN/CLOSE control, not reversible	00
OPEN/CLOSE control, not reversible with 2 additional potential-free limit switches	0E
OPEN/CLOSE control, not reversible with potentiometer output	0P
For selection options see tables on page 6	

Actuator version	Code
Torque 6 Nm, operating time 4 sec; Voltage/frequency B1 / C1 / B4 / C4	1006
Torque 15 Nm, operating time 11 sec; Voltage/frequency B1 / C1	1015
Torque 6 Nm, operating time 4 sec; Voltage/frequency O4	2006
Torque 15 Nm, operating time 11 sec; Voltage/frequency B4 / C4 / O4	2015
Torque 70 Nm, operating time 11 sec; Voltage/frequency B4 / C4 / O4	2070
Torque 35 Nm, operating time 15 sec; Voltage/frequency C1 / C4 / O4	2070

Ball configuration (only with body type M)	Code
T-port	T
L-port	L

Order example	723	15	D	2	1	14	C1	A0	1006	T
Type	723									
Nominal size		15								
Body configuration (code)			D							
Connection (code)				2						
Valve body material (code)					1					
Seal material (code)						14				
Voltage/Frequency (code)							C1			
Functional module (code)								A0		
Actuator version (code)									1006	
Ball configuration (code)										T

Actuator dimemsions GEMÜ 710 - pneumatically operated [mm]

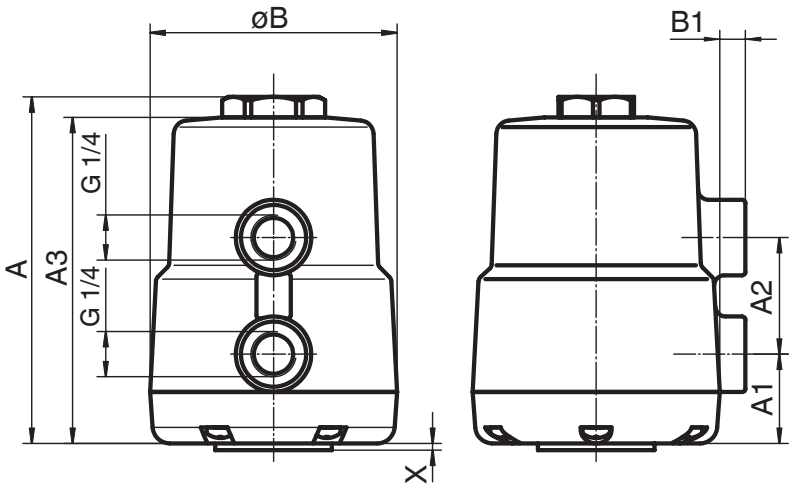

Actuator size	A	A1	A2	A3	ø B	B1
0	112	37	34	106	72	7
1	177	41	65	171	97	3
2	180	42	69	174	127	3
3	229	28	96	223	182	4

Dimemsions connection flange [mm]

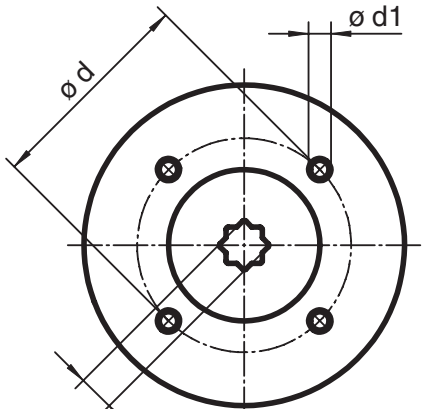

Actuator size	Flange size	ød	ø d1	s	s max.	Hub/wrench size (Code)
0	F04	42	M5	8	11	S08
				9		S09
	F05	50	M6	8		S08
				9		S09
1	F04	42	M5	11	14	S11
	F05	50	M6	11		S11
	F07	70	M8	11		S11
				14		S14
2	F05	50	M6	11	14	S11
				14		S14
	F07	70	M8	11		S11
				14		S14
3	F07	70	M8	17	17	S17

	DN 15	DN 20	DN 25	DN 32	DN 40	DN 50	DN 65	DN 80	DN 100
A	40.0	49.0	49.0	64.0	64.0	76.0	175.0	272.0	330.0
Ct	54.0	65.0	69.5	82.5	89.0	108.0	164.0	177.0	195.0

Actuator dimemsions GEMÜ 723 with motorized actuator [mm]

Actuator version 1015 / 2015

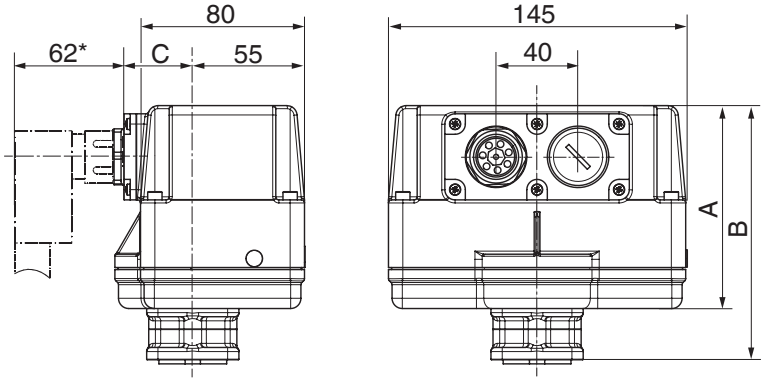

Actuator version	A	B	C
1006 - 1015	69	94	49
2006 - 2015	99	124	53

Actuator version 3035

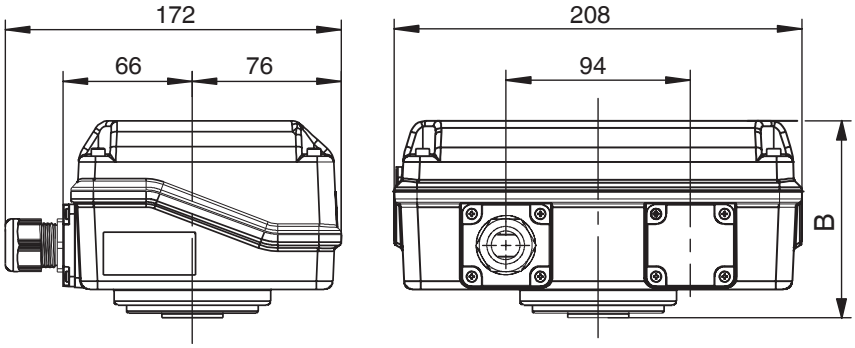

Actuator version 2070 [mm]

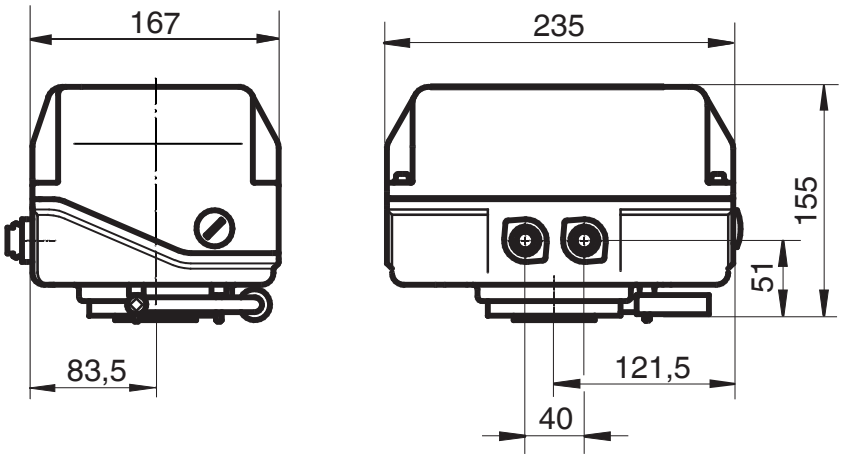

Note: For connection and wiring diagrams for motorized GEMÜ actuators see data sheet

Actuator version code 1006, 1015, 2006, 2015, 3035 - Data sheet GEMÜ 9428
Actuator version code 2070, 4100, 4200, 6400 - Data sheet GEMÜ 9468

Body dimensions [mm]

Straight through body (2/2-way) - code D

DN	LA			LB			LC			H1		øD	ød	A
	PVC-U	PP	PVDF	PVC-U	PP	PVDF	PVC-U	PP	PVDF	GEMÜ 710,723	GEMÜ 717			
10	75	75		103			75	74.5		58.0	54.0	54	16	40
15	71	73		103			71	73.0		58.0	54.0	54	20	40
20	77	81		115			77	82.0		73.5	65.0	65	25	49
25	84	90		128			84	90.0		74.0	69.5	73	32	49
32	94	100		146			94	100.0		97.0	82.5	86	40	64
40	102	116		164			102	117.0		104.0	89.0	98	50	64
50	123	143		199			123	144.0		114.0	108.0	122	63	76
65	147	147		235	213		147			119.0	164.0	164	75	175
80	168	167		270	239		168			132.0	177.0	203	90	272
100	186	186		308	268		186			150.0	195.0	238	110	330

GEMÜ 710 u. 723 with mounting kit

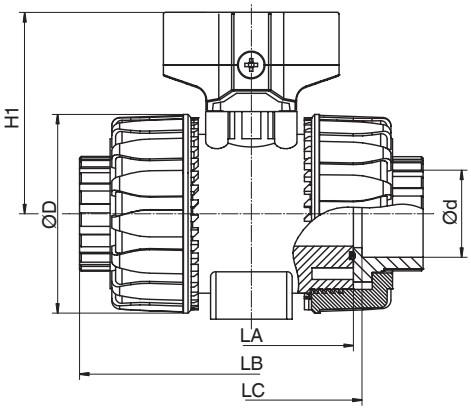

GEMÜ 717

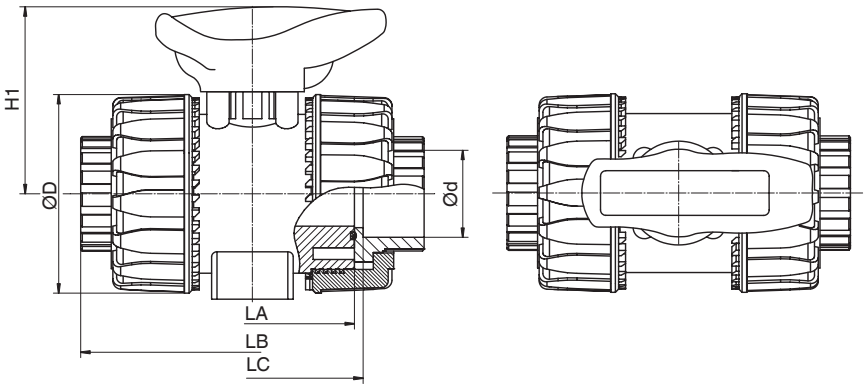

Multi-port body (3/2-way) - code M

DN	LA	LB	LC		LA1	LB1	LC1	H		H1		øD	ød
			PVC-U	PVDF				GEMÜ 710,723	GEMÜ 717	GEMÜ 710,723	GEMÜ 717		
10	80	118.0	90.0	95.0	40.0	59.0	43.0	87	54.0	58.0	51.0	54	16
15	80	118.0	86.0		40.0	59.0	43.0	87	83.0	58.0	51.0	54	20
20	100	145.0	107.0		50.0	72.5	53.5	108	95.5	73.5	56.5	65	25
25	110	160.0	116.0		55.0	80.0	58.0	113	107.0	74.0	62.0	73	32
32	131	188.5	136.5		65.5	94.3	68.3	143	128.5	97.0	78.0	86	40
40	148	219.0	157.0		74.0	109.5	78.5	156	136.0	104.0	80.0	98	50
50	179	266.5	190.5		89.5	133.3	95.3	176	165.0	114.0	97.5	122	63

DN 10 not available with valve body material PP (Code 5)

GEMÜ 710 u. 723 with mounting kit

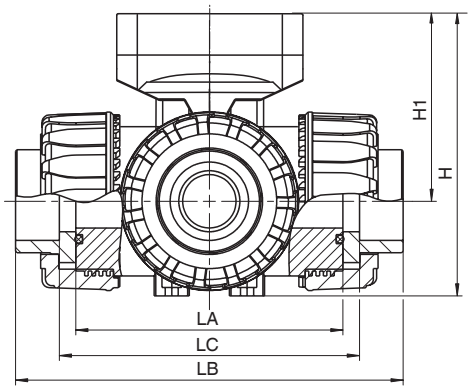

GEMÜ 717

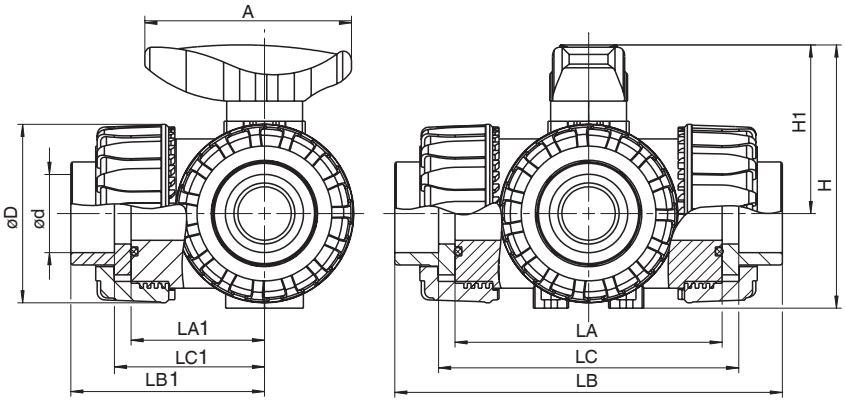

Port positions

T - port

	End position "Closed"	End position "Open"
As supplied	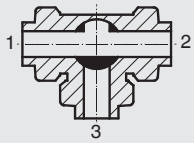	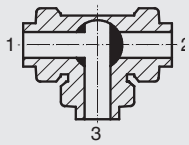
Optional port positions, can be user adjusted	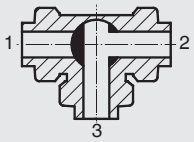	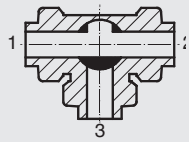
	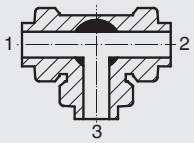	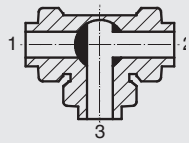
	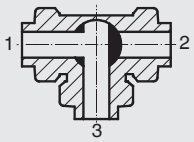	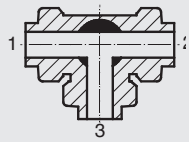

L - port

As supplied	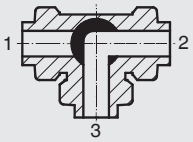 Optional port positions, can be user adjusted

Accessories

GEMÜ 324
3/2-way solenoid valve

GEMÜ 1201
Electrical position indicator
with microswitches

GEMÜ 1214
Electrical position indicator
with proximity switches

GEMÜ 1230
Electrical position indicator
with microswitches

GEMÜ 1435
Electro-pneumatic positioner
single or double acting

GEMÜ 1470
Control air adapter NAMUR

Futher ball valves, accessories and other products see our Product Range catalogue and Price List. Contact GEMÜ.

Technical data sheet

Should there be any doubts or misunderstandings, the German version of this data sheet is the authoritative document!

Subject to alteration · 04/2011 · 88363201

GEMÜ Gebr. Müller · Apparatebau GmbH & Co. KG · Fritz-Müller-Str. 6-8 · D-74653 Ingelfingen-Criesbach · Tel. +49 (0) 7940/123-0 · Telefax +49 (0) 7940/123-224
info@gemue.de · www.gemue.de