Wafer Type Butterfly Valve

Construction

GEMÜ 450, 451, 457 and **463** are 2/2-way wafer type butterfly valves in the nominal sizes DN 65 - 250. The two-piece valve body is made of high-grade PES and the body halves are connected by stainless steel bolts enabling easy and quick seat replacement. The disk is available in PP (DN 65-200), UHM-PE (DN 250) or in stainless steel 1.4408. The valve has a one-piece disc and shaft. As sealing material are available NBR, FPM and EPDM.

GEMÜ 450 pneumatically operated 2/2-way wafer type butterfly valve has a maintenance-free piston actuator. Normally closed and Double acting control functions are available.

GEMÜ 451 has a pneumatic piston actuator and is available in single acting (spring return) or double acting design. An optical position indicator is integrated as standard.

GEMÜ 457 is a manually operated wafer type butterfly valve.

GEMÜ 463 has a low maintenance electric actuator. An optical position indicator and a manual override are integrated as standard.

Features

- Suitable for inert and corrosive* liquid media
- A single seat performs line and atmospheric sealing
- Opening and closing behaviour independent of the valve operating pressure

Advantages

- Optional accessories:
- Low weight, plastic butterfly valve body
- **GEMÜ 450/451** - Optical or electrical position indicator
  - Stroke limiter
  - Electro-pneumatic positioner
  - Electrical limit switches (mechanical or proximity switches)
- **GEMÜ 457** - Limit switches GEMÜ 1215
- **GEMÜ 463** - Adjustable limit switches for potential-free control signals
  - Integrated positioner 4-20 mA
  - Analogue position feedback by means of a potentiometer

* see information on working medium on page 2

Drawing - Butterfly valve body

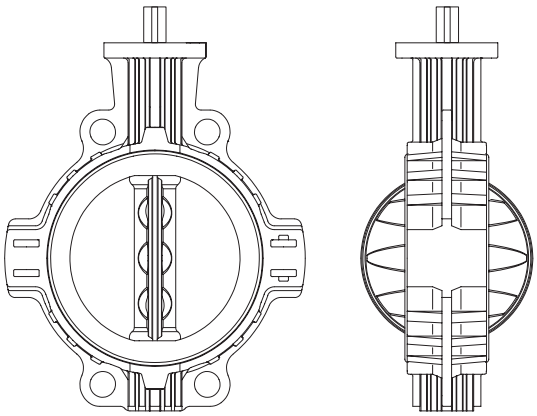

GEMÜ 450

GEMÜ 451

GEMÜ 457

GEMÜ 463

450, 451, 457, 463

General technical data

Working medium	
Inert and corrosive liquid media which have no negative impact on the physical and chemical properties of the disc and seat materials.	
Max. perm. pressure of working medium	6 bar
Max. perm. temperature of working medium	90 °C
Max. ambient temperature	60 °C
Steam pressure (pD)	≤ 0.5 bar

Connection standard	
Flange (wafer type butterfly valve DIN 1092-2)	PN 10

Technical data GEMÜ 450

Travel range	
Nominal travel	0° - 90°
Maximum travel	92° - 93°

Maximum control pressure [bar]			
Control function	Actuator 1	Actuator 2	Antrieb 3
1 + 2	6	6	5
3	6	6	4

Control medium	
Max. perm. temperature of control medium	60 °C
Filling volume actuator 1	0.2 dm^3
Filling volume actuator 2	0.5 dm^3
Filling volume actuator 3	1.5 dm^3

Nominal size [DN]	Weight [kg]
65	2.3
80	2.8
100	6.7
125	8.9
150	9.8

Order data GEMÜ 450

Body configuration	Code
PN 10 wafer type butterfly valve (acc. to DIN 1092-2)	D

Disc material	Code
PP, Polypropylene	5
1.4408, Stainless steel	37

Body material	Code
PES, Polyethersulphone	29

Liner	Code
NBR, Perbunan N	2
FPM	4
EPDM	14

Control function	Code
Normally closed (NC)	1
Normally open (NO) (By rotating the actuator 90° during assembly)	2
Double acting (DA)	3

Actuator size		Code
Actuator size 1	ø 70 mm, DN 65	1
Actuator size 2	ø 100 mm, DN 80/100	2
Actuator size 3	ø 140 mm, DN 125/150	3

Order example	450	65	D	5	29	14	3	1
Type	450							
Nominal size		65						
Body configuration (code)			D					
Disc material (code)				5				
Body material (code)					29			
Liner (code)						14		
Control function (code)							3	
Actuator size (code)								1

Technical data GEMÜ 451

Control medium	
Control pressure	min. 6 / max. 8 bar
Max. perm. temperature of control medium	60 °C

Travel range		
(± 20° adjustable)	(75°-95°)	90°

Nominal size DN	Weight [kg] Control function 1	Weight [kg] Control function 3	Filling volume [l]
65	4.4	2.7	0.3
80	4.4	2.7	0.3
100	9.8	3.8	1.2
125	12.6	5.4	1.5
150	18.1	5.4	2.4
200	31.6	10.2	4.3
250	45.1	14.5	5.9

Installation instructions for GEMÜ 451 DN 200 and DN 250

Caution! When pneumatic single acting actuators sizes DN 200 and DN 250 are used, the actuators either have to be supported or the butterfly valve has to be installed vertically!

Order data GEMÜ 451

Body configuration	Code
Wafer, length EN 558, series 25; DN65 series 20	D

Disc material	Code
PP, polypropylene (DN 65- 200)	5
1.4408 stainless steel (DN 65- 250)	37
UHM-PE, polyethylene (only DN 250)	80

Body material	Code
PES, polyethersulfone	29

Liner	Code
NBR	2
FPM	4
EPDM	14

Control function	Code
Normally closed (NC)	1
Normally open (NO) (By rotating the actuator 90° during assembly)	2
Double acting (DA)	3

Actuator size		Code
Double acting, clockwise rotation		
DR0060U	(DN 65, 80)	DU06
DR0100U	(DN 100)	DU10
DR0150U	(DN 125,150)	DU15
DR0300U	(DN 200)	DU30
DR0450U	(DN 250)	DU45
Single acting, spring closing*		
SC0100U-6	(DN 65, 80)	SU10
SC0220U-6	(DN 100)	SU22
SC0300U-6	(DN 125)	SU30
SC0450U-6	(DN 150)	SU45
SC0900U-6	(DN 200)	SU90
SC1200U-6	(DN 250)	S12U

* Control function code 1 and 2

Order example	451	65	D	5	29	14	3	D006
Type	451							
Nominal size		65						
Body configuration (Code)			D					
Disc material (Code)				5				
Body material (Code)					29			
Liner (Code)						14		
Control function (Code)							3	
Actuator size (Code)								D006

Order information

The controllable inlet and outlet throttle GEMÜ 2021 must be used with pneumatic actuators.
Please order it separately acc. to the following table:

Control function 1 and 2	Actuator size Code	Throttle order no.	Control function 3	Actuator size Code	Throttle order no.
DN 65 u. 80	SU10	99007425 (G 1/8)	DN 65 u. 80	DU06	99007425 (G 1/8)
DN 100	SU22	99003985 (G 1/4)	DN 100	DU10	99007425 (G 1/8)
DN 125	SU30	99003985 (G 1/4)	DN 125 u. 150	DU15	99003985 (G 1/4)
DN 150	SU45	99003985 (G 1/4)	DN 200	DU30	99003985 (G 1/4)
DN 200	SU90	99003985 (G 1/4)	DN 250	DU45	99003985 (G 1/4)
DN 250	S12U	99003985 (G 1/4)			

Technical data GEMÜ 457

Travel range	
Nominal travel	0° - 90°
Locking positions:	0° (closed) 22.5° 45.0° 67.5° 90° (open)

Nominal size	Torque	Weight
DN	[Nm]	[kg]
65	25	1.7
80	32	2.2
100	65	3.0
125	85	6.0
150	120	6.5
200	250	12.7
250	350	17.3

Order data GEMÜ 457

Body configuration	Code
Wafer, length EN 558, series 25; DN65 series 20	D

Disc material	Code
PP, polypropylene (DN 65- 200)	5
1.4408 stainless steel (DN 65- 250)	37
UHM-PE, polyethylene (only DN 250)	80

Body material	Code
PES, polyethersulfone	29

Liner	Code
NBR	2
FPM	4
EPDM	14

Control function	Code
Manually operated	0

Operator version	Code
Lever	
DN 65 - 100	M01
DN 125 + 150	M02
DN 200 + 250	M03

Order example	457	100	D	5	29	14	0	M01
Type	457							
Nominal size		100						
Body configuration (Code)			D					
Disc material (Code)				5				
Body material (Code)					29			
Liner (Code)						14		
Control function (Code)							0	
Operator version (Code)								M01

Technical data GEMÜ 463

General notes

Housing protection class to EN 60529	IP 65
Electrical protection class	I

Directives:
EC Machine directive 98/37/EC, annex IIB
EC EMC directive 89/336/EEC

Special feature:
Manual override is standard

Weight:

DN 65	6.5 kg	DN 150	18.0 kg
DN 80	6.9 kg	DN 200	23.8 kg
DN 100	7.2 kg	DN 250	27.4 kg
DN 125	17.5 kg		

Functional data

Actuator version	Torque [Nm]	Operating time [sec]
Code 2070	70	approx. 15
Code 4100	100	approx. 20
Code 4200	200	approx. 16
Code 6400	400	approx. 29

Travel range

Nominal travel	90°
Maximum travel	93°
Setting range Min. limit switch	0-20°
Setting range Max. limit switch	70-93°

Power supply

Rated voltage	24 V DC / 24 V, 120 V, 230 V AC
Rated frequency at AC rated voltage	50/60 Hz
Voltage tolerance	+10 % / -15 %

Rating

Actuator version code 2070/4100/4200	100 % rating
Actuator version code 6400	70 % rating

Output signals (option)

Actual value potentiometer	3 kOhm (±20 %)
Potential-free limit switches change-over contact	250 V AC/6A

Overload protection (internal)

24V DC	T6,3A
24V AC	-
120V AC	T2A
230V AC	T2A

Input signals

0-10 V (R_i = 45 kOhm) with functional module E1

0/4-20 mA (R_i = 33 Ohm) with functional module E2

Switching input OPEN/CLOSED for A0/AE/AP — 24 V - 250 V DC/AC

Switching input OPEN/CLOSED for 00/0E/0P — 24 V DC / 24 V AC / 120 V AC / 230 V AC*

* depending on rated voltage

Electrical connection

Plug type	Flange plug Binder series 692/693
Cable diameter	6 - 8 mm
Max. cross section of wire	0.75 mm²

Power and current consumption

Actuator version code	24V DC		24V AC		120V AC		230V AC	
	A0/AE/AP E1/E2	00/0E/0P	A0/AE/AP E1/E2	00/0E/0P	A0/AE/AP E1/E2	00/0E/0P	A0/AE/AP E1/E2	00/0E/0P
	Power consumption							
2070 (70 Nm)	96 W	63 W	-	63 W	160 W	-	161 W	-
4100 (100Nm)	96 W	105 W	-	140 W	160 W	105 W	161 W	130 W
4200 (200 Nm)	96 W	90 W	-	110 W	160 W	90 W	161 W	105 W
6400 (400 Nm)	120 W	120 W	-	120 W	170 W	120 W	185 W	145 W
	Current consumption - Rated current							
2070 (70 Nm)	4 A	2.6 A	-	2.6 A	1.2 A	-	0.7 A	-
4100 (100Nm)	4 A	4.4 A	-	5.8 A	1.2 A	0.88 A	0.7 A	0.55 A
4200 (200 Nm)	4 A	3.6 A	-	4.5 A	1.2 A	0.72 A	0.7 A	0.45 A
6400 (400 Nm)	5 A	5.0 A	-	6.3 A	1.4 A	1.00 A	0.8 A	0.63 A
	Current consumption - Max. current at start up							
2070 (70 Nm)	4 A	14 A	-	34 A	1.2 A	-	0.7 A	-
4100 (100Nm)	4 A	35 A	-	35 A	1.2 A	16 A	0.7 A	1 A
4200 (200 Nm)	4 A	35 A	-	35 A	1.2 A	16 A	0.7 A	1 A
6400 (400 Nm)	5 A	35 A	-	35 A	1.4 A	16 A	0.8 A	1 A

Technical data GEMÜ 463

Materials	
Actuator:	
Actuator version code 2070	ABS
Actuator version code 4100/4200/6400	Aluminium
Butterfly valve body:	
PES, Polyethersulfone	

Recommended motor protection		
Voltage	Motor protection switch type	Set current
24V DC	Siemens 3RV 1011-1FA10	4.0 A
24V AC	Siemens 3RV 1011-1FA10	4.0 A
120V AC	Siemens 3RV 1011-OHA10	0.6 A
230V AC	Siemens 3RV 1011-OHA10	0.6 A

Order data

Body configuration	Code
Wafer, length EN 558, series 25; DN65 series 20	D

Disc material	Code
PP, polypropylene (DN 65- 200)	5
1.4408 stainless steel (DN 65- 250)	37
UHM-PE, polyethylene (only DN 250)	80

Body material	Code
PES, polyethersulfone	29

Liner	Code
NBR, Perbunan N	2
FPM	4
EPDM	14

Supply voltage / Mains frequency	Code
24V DC (possible for all variants)	C1
24V AC 50/60 Hz only for functional module 00, 0E, 0P	C4
120V AC 50/60 Hz functional module 00, 0E, 0P not available for actuator version 2070	G4
230V AC 50/60 Hz functional module 00, 0E, 0P not available for actuator version 2070	L4

Functional module	Code
OPEN/CLOSE control with relay, not reversible	00*
OPEN/CLOSE control with 2 additional potential-free limit switches, with relay, not reversible	0E*
OPEN/CLOSE control with potentiometer output, with relay, not reversible	0P*
OPEN/CLOSE control	A0**
OPEN/CLOSE control with 2 additional potential-free limit switches	AE**
OPEN/CLOSE control with potentiometer output	AP**
Control module; for external set value 0-10 V DC	E1**
Control module; for external set value 0/4-20 mA	E2**

* Overall height 1 ** Overall height 2

Actuator version	Code
70 Nm	2070
100 Nm	4100
200 Nm	4200
400 Nm	6400

Order example	463	150	D	5	29	14	C1	A0	4200
Type	463								
Nominal size		150							
Body configuration (Code)			D						
Disc material (Code)				5					
Body material (Code)					29				
Liner (Code)						14			
Supply voltage / Mains frequency (Code)							C1		
Functional module (Code)								A0	
Actuator version (Code)									4200

Connection / wiring diagram GEMÜ 463

Connection / wiring diagram A0 - Open / Closed version

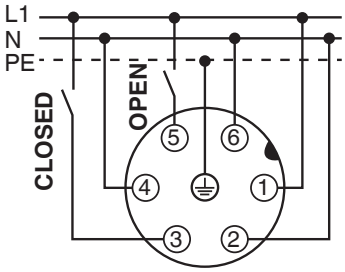

X 1: Power connector

Pin	Signal name
1	L1 / L+, Supply voltage
2	N1 / L-, Supply voltage
3	L1 / L+, Direction of travel CLOSED
4	N / L-, Direction of travel CLOSED
5	L1 / L+, Direction of travel OPEN
6	N / L-, Direction of travel OPEN
⏚	PE, Protective earth conductor

When the OPEN and CLOSED switches are operated simultaneously the actuator "CLOSES".

In the connector plug pins 2, 4 and 6 can be connected.

→ Advantage: 5-wire cable can be used.

No galvanic separation of inputs!

Connection / wiring diagram AE - 2 potential-free limit switches

X 1: Power connector

Pin	Signal name
1	L1 / L+, Supply voltage
2	N1 / L-, Supply voltage
3	L1 / L+, Direction of travel CLOSED
4	N / L-, Direction of travel CLOSED
5	L1 / L+, Direction of travel OPEN
6	N / L-, Direction of travel OPEN
⏚	PE, Protective earth conductor

N/L signals in the unit are separated. Potential assignment by customer.

X 2: Connector S1/S2
(Additional potential-free limit switches)

Pin	Signal name
1	S 1:1, Change-over contact limit switch CLOSED
2	S 1:4, Make-contact limit switch CLOSED
3	S 1:2, Break-contact limit switch CLOSED
4	S 2:2, Break-contact limit switch OPEN
5	S 2:4, Make-contact limit switch OPEN
6	S 2:1, Change-over contact limit switch OPEN
⏚	PE, Protective earth conductor

When the OPEN / CLOSED switches are operated simultaneously the actuator "CLOSES".

Connection / wiring diagram AP - Potentiometer output

X 1: Power connector

Pin	Signal name
1	L1 / L+, Supply voltage
2	N1 / L-, Supply voltage
3	L1 / L+, Direction of travel CLOSED
4	N / L-, Direction of travel CLOSED
5	L1 / L+, Direction of travel OPEN
6	N / L-, Direction of travel OPEN
⏚	PE, Protective earth conductor

N/L signals in the unit are separated. Potential assignment by customer.

X 2: Connector S1/S2
(Rotary potentiometer
for actual value feedback)

Pin	Signal name
1	n.c.
2	n.c.
3	n.c.
4	Us-, Actual value potentiometer signal voltage minus
5	Us ⎽⎼, Actual value potentiometer signal output
6	Us+, Actual value potentiometer signal voltage plus
⏚	PE, Protective earth conductor

When the OPEN / CLOSED switches are operated simultaneously the actuator "CLOSES".

Connection / wiring diagram E2 - Control module

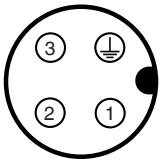

X 1: Power connector

Pin	Signal name
1	L1 / L+, Supply voltage
2	N1 / L-, Supply voltage
3	n.c.
⏚	PE, Protective earth conductor

X 2: Signal connector

Pin	Signal name
1	n.a. (do not use)
2	n.a. (do not use)
3	I-, external set value 0/4-20 mA
4	I+, external set value 0/4-20 mA
5	n.c.
6	n.c.
⏚	PE, Protective earth conductor

Connection / wiring diagram E1 - Control module

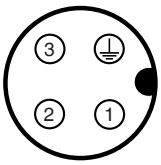

X 1: Power connector

Pin	Signal name
1	L1 / L+, Supply voltage
2	N1 / L-, Supply voltage
3	n.c.
⏚	PE, Protective earth conductor

X 2: Signal connector

Pin	Signal name
1	n.a. (do not use)
2	n.a. (do not use)
3	U-, external set value 0-10 V
4	U+, external set value 0-10 V
5	n.c.
6	n.c.
⏚	PE, Protective earth conductor

Connection / wiring diagram 00 - Open / Closed version (relay version)

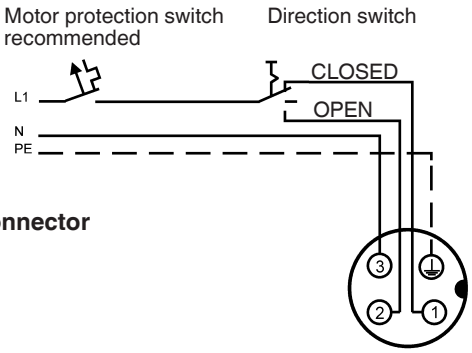

X 1: Power connector

Pin	Signal name
1	L1, Direction of travel CLOSED
2	L1, Direction of travel OPEN
3	N, Neutral conductor
⏚	PE, Protective earth conductor

Connection / wiring diagram - 0E - 2 potential-free limit switches (relay version)

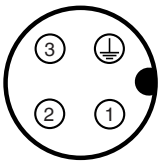

X 1: Power connector

Pin	Signal name
1	L1, Direction of travel CLOSED
2	L1, Direction of travel OPEN
3	N, Neutral conductor
⏚	PE, Protective earth conductor

X 2: Connector S1/S2
(Additional potential-free limit switches)

Pin	Signal name
1	S 1:1, Change-over contact limit switch CLOSED
2	S 1:4, Make-contact limit switch CLOSED
3	S 1:2, Break-contact limit switch CLOSED
4	S 2:2, Break-contact limit switch OPEN
5	S 2:4, Make-contact limit switch OPEN
6	S 2:1, Change-over contact limit switch OPEN
⏚	PE, Protective earth conductor

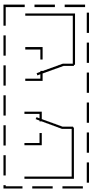

0P - Potentiometer output (relay version)

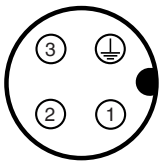

X 1: Power connector

Pin	Signal name
1	L1, Direction of travel CLOSED
2	L1, Direction of travel OPEN
3	N, Neutral conductor
⏚	PE, Protective earth conductor

X 2: Connector S1/S2
(Rotary potentiometer for actual value feedback)

Pin	Signal name
1	n.c.
2	n.c.
3	n.c.
4	Us-, Actual value potentiometer signal voltage minus
5	Us ⎍, Actual value potentiometer signal output
6	Us+, Actual value potentiometer signal voltage plus
⏚	PE, Protective earth conductor

Dimensions [mm]

Body

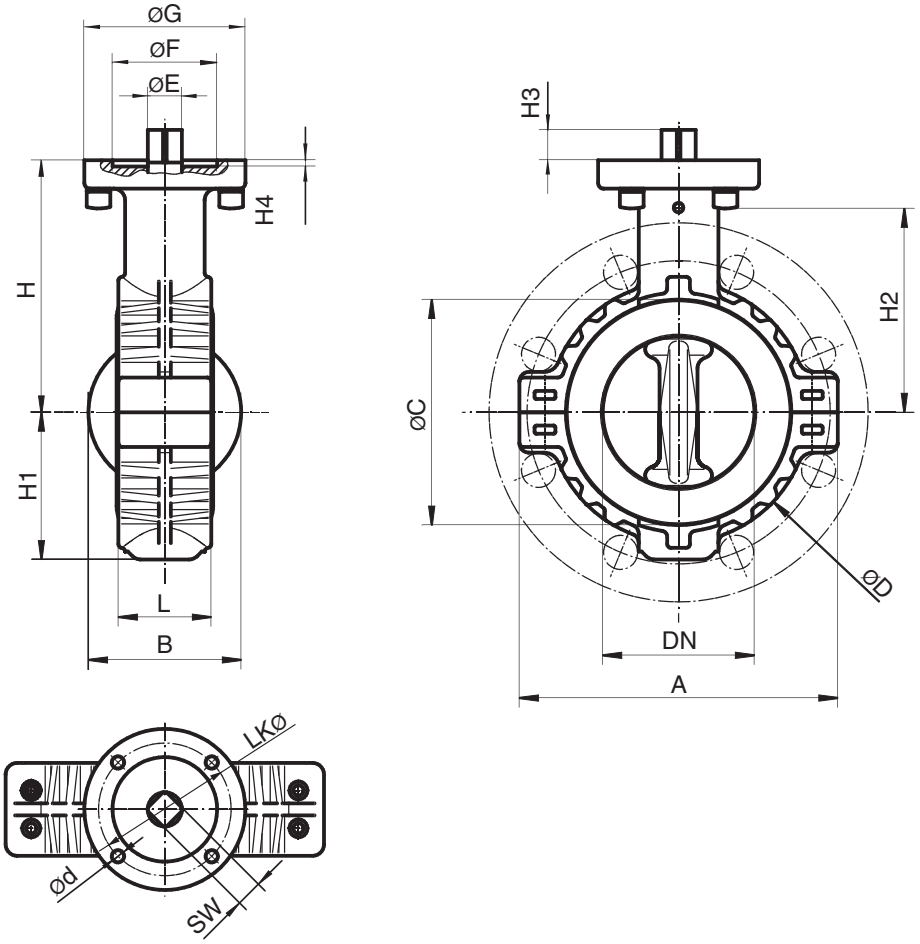

DN	A	B	øC	L	øD	øE	øF	øG	H	H1	H2	H3	H4	SW	Lkø	øD
65	136	66	103	46	111	18	55.2	85	123	66	97	16	3.3	14	70	6.5
80	168	81	125	49	138	18	55.2	85	133	78	107	16	3.3	14	70	6.5
100	200	102	147	56	160	18	55.2	85	140	109	114	16	3.3	14	70	6.5
125	240	126	159	64	193	22	55.3	90	178	123	148	18	3.5	17	70	8.4
150	265	152	184	70	218	22	55.3	90	190	135	160	18	3.5	17	70	8.4
200	337	201	244	71	257	28	70.3	125	236	164	208	23	3.5	22	102	11.0
250	395	251	294	75	324	28	70.3	125	261	215	230	23	3.5	22	102	11.0

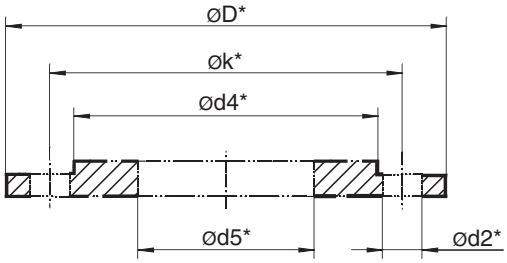

Mounting flange dimensions
All flanges meeting the following requirements can be used:

1: ø k* - ø d2* > ø D
2: ø d4* > ø C
3: ø D* < 2 x H2
4: ø d5* > DN

* Dimensions acc. to flange standards

Actuator dimensions GEMÜ 450 [mm]

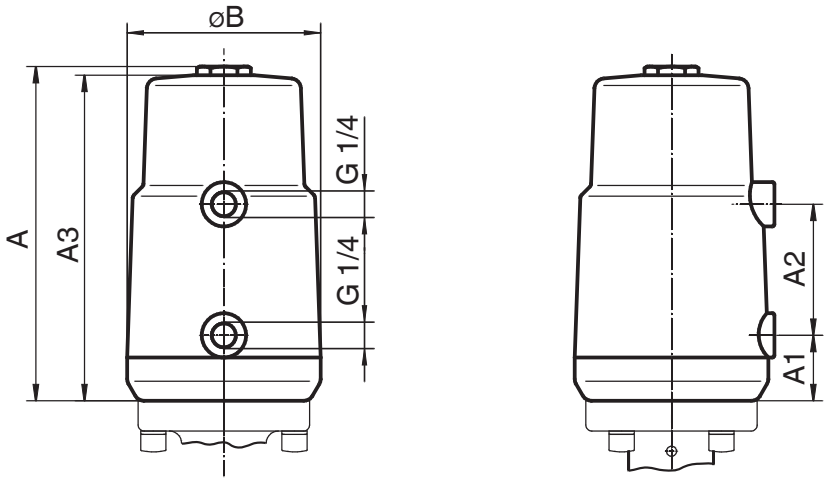

DN	Actuator size	A	A1	A2	A3	ø B
65	1	177	41	65	171	97
80 / 100	2	180	42	69	174	127
125 / 150	3	229	28	96	223	182

Actuator dimensions GEMÜ 451 [mm]

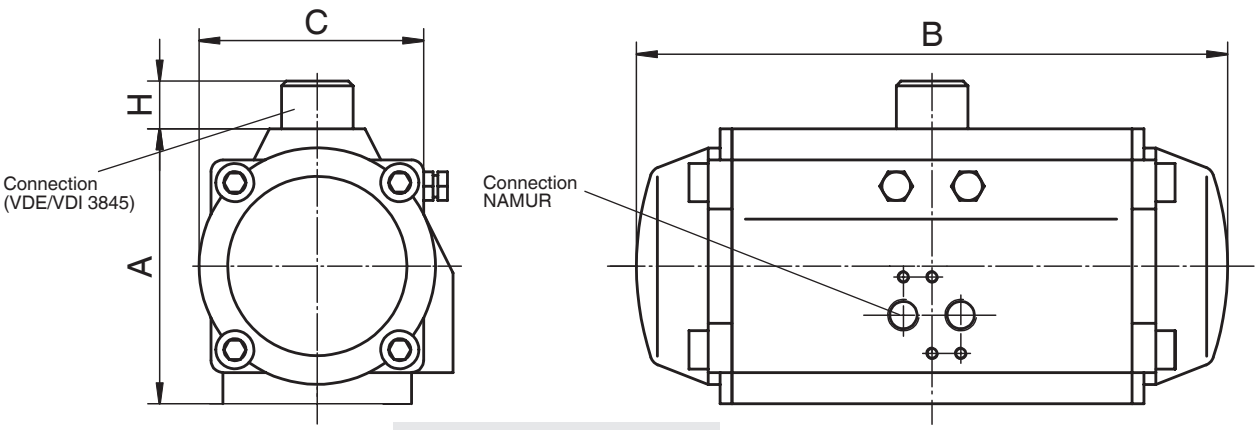

Mounting position variable

Actuator size - code	A	H	B	C
DU06	102.0	20	203.5	84.5
SU10	115.0	20	241.0	97.5
DU10	115.0	20	241.0	97.5
DU15	127.0	20	259.0	111.0
SU22	145.0	30	304.0	127.0
DU30	157.0	30	333.0	136.0
SU30	157.0	30	333.0	136.0
DU45	177.0	30	394.5	156.5
SU45	177.0	30	394.5	156.5
SU90	220.5	50	474.0	190.7
S12U	245.0	50	543.0	213.0

Operator dimensions GEMÜ 457 [mm]

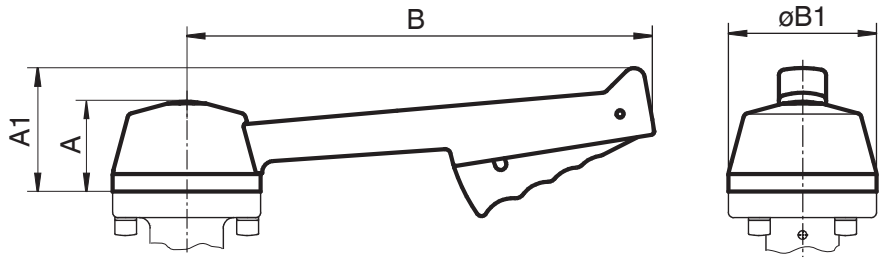

DN	Operator size - code	A	A1	B	Ø B1
65 - 100	M01	51	71	270	85
125 + 150	M02	82	82	380	140
200 + 250	M03	82	82	550	172

Actuator dimensions GEMÜ 463 [mm]

Actuator version - code 2070

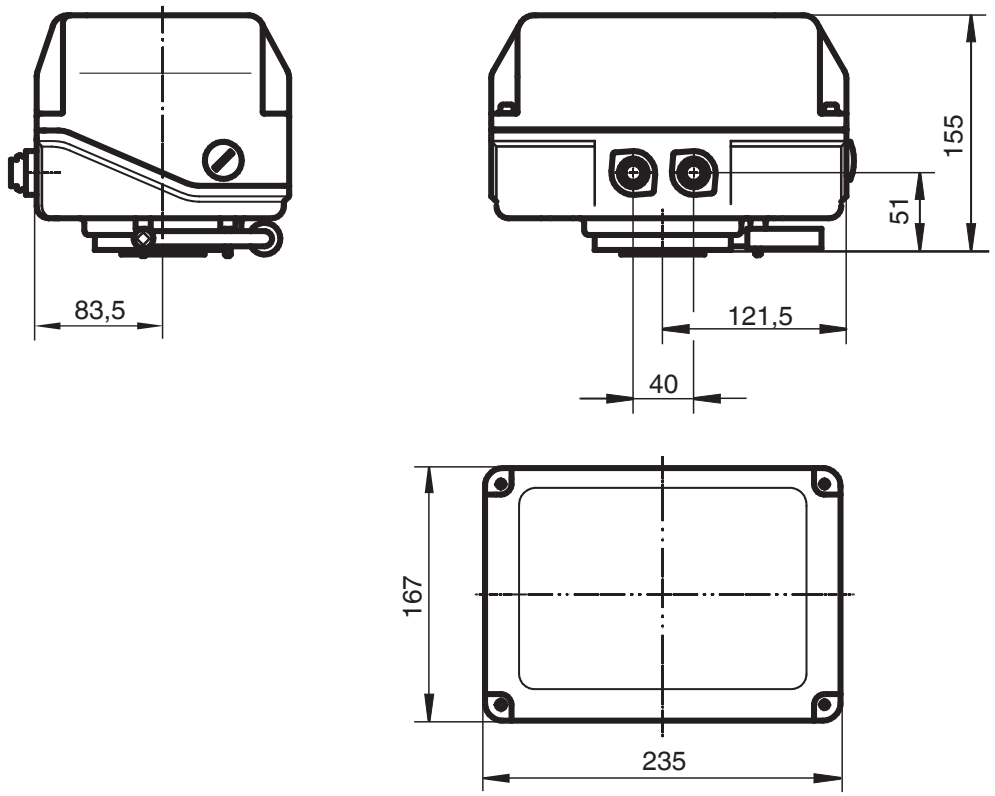

Actuator version 4100/4200

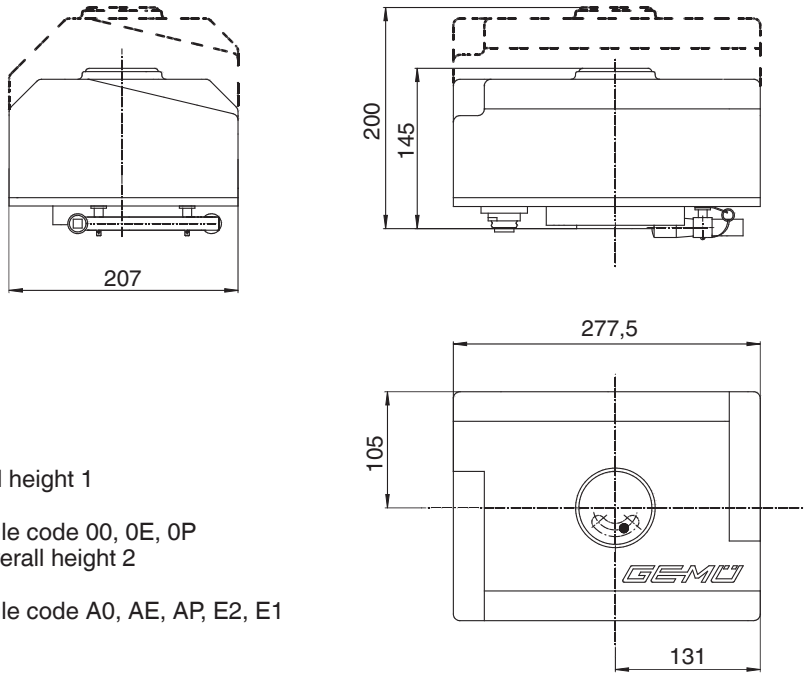

——— full line ≙ overall height 1
version
functional module code 00, 0E, 0P
- - - - - broken line ≙ overall height 2
version
functional module code A0, AE, AP, E2, E1

Actuator version 6400

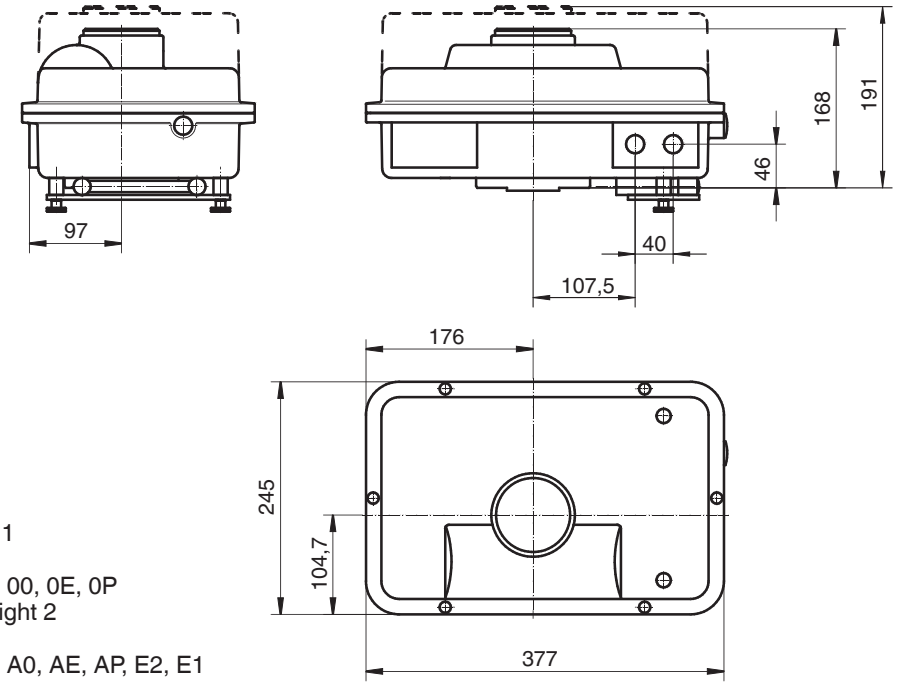

——— full line ≙ overall height 1
version
functional module code 00, 0E, 0P
- - - - - broken line ≙ overall height 2
version
functional module code A0, AE, AP, E2, E1

For further plastic or metal butterfly valves, accessories and other products, please see our Product Range catalogue and Price List. Contact GEMÜ.

Technical data sheet

Should there be any doubts or misunderstandings, the German version of this data sheet is the authoritative document!

Subject to alteration · 01/2010 · 88342390

GEMÜ® VALVES, MEASUREMENT AND CONTROL SYSTEMS

TÜVRheinland® CERT ISO 9001

GEMÜ Gebr. Müller · Apparatebau GmbH & Co. KG · Fritz-Müller-Str. 6-8 · D-74653 Ingelfingen-Criesbach · Tel. +49 (0) 7940/123-0 · Telefax +49 (0) 7940/123-224
info@gemue.de · www.gemue.de